All rights reserved. Specifications subject to change without notice.

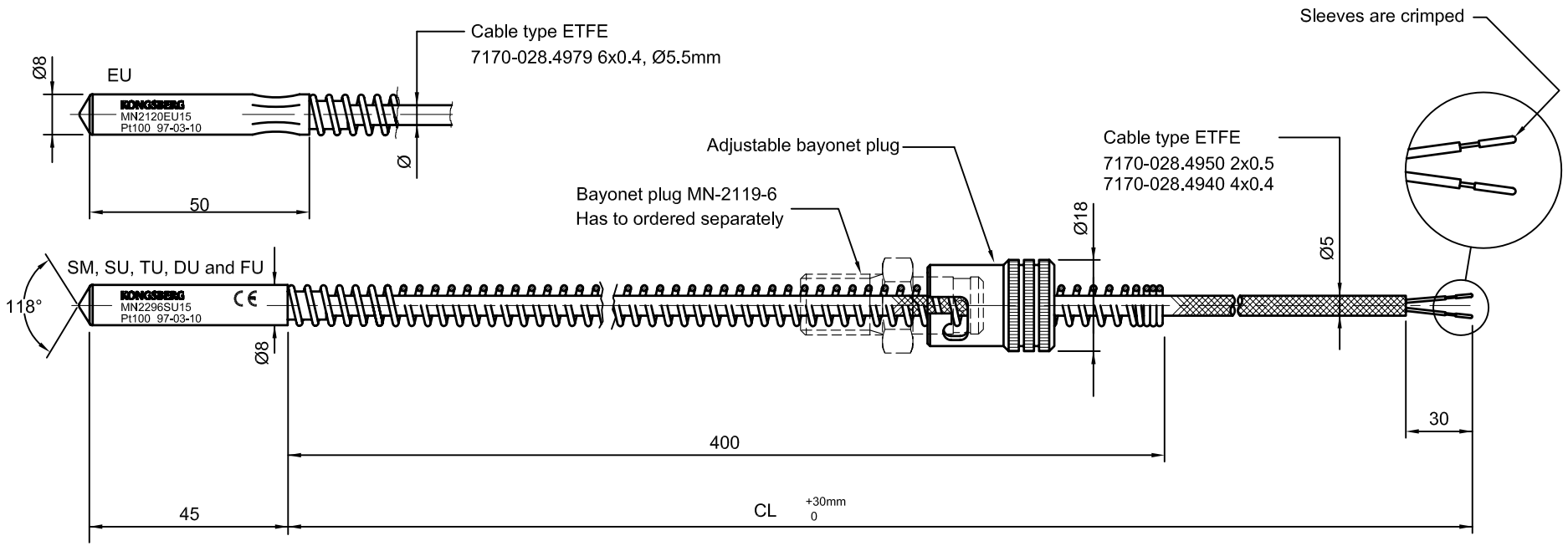

ORDERING EXAMPLE: MN2296 SU15

- Mechanical design
- Single element (Letter no.1)
- Pt100 (Letter no.2)
- CL in decimeter

LETTER NO.1	EXPLANATION
S	Single element, 2-wire
T	Single element, 3-wire
F	Single element, 4-wire
D	Double element, 2-wire
E	Double element, 3-wire

LETTER NO.2	ELEMENT TYPE	RANGE
M	Pt1000 ohm/0°C	-50 to 200°C
U	Pt100 ohm/0°C	-50 to 200°C

CONNECTIONS

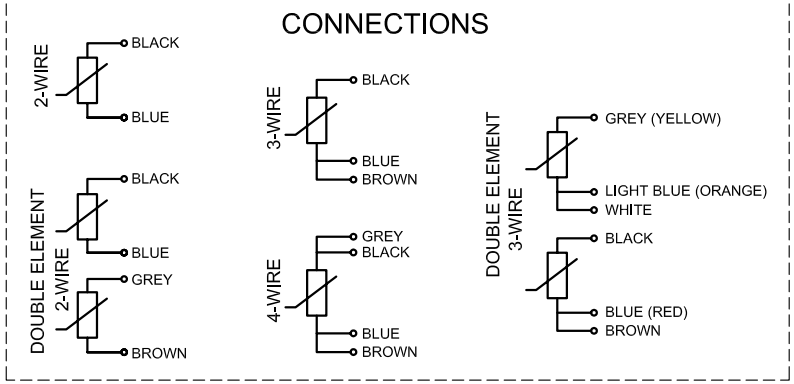

REMARKS

1. Material, sensor tip: Brass.
2. Max. temp., cable: 150°C.
3. Max. temp., sensor tip: 200°C.
4. Protection grade: IP56.
5. Weight (MN2296SU15): 130 gram.
6. Bayonet plug type MN-2119 can be used for mounting the sensor. Has to be ordered separately.

S dwg.: MN-2297

Date	Dsgn/Dwn	Trac	Scale/Format
1994-05-12	AJK		1:1 [A3]
Checked	Spec Ctrl.	Approved	
OLy		AJK	

Kongsberg Maritime AS
Automation
Trondheim

Temperature sensor type MN2296-

DIMENSIONAL SKETCH

Repl. for	Repl. by	Next sheet

Dwg no.	Sh.no.	Rev.	Lang.
MN-2296		E	

0449

Rev.	Description	Date/Sign.
B	New dsg bayonetplug+spring,970310,BSw/	
E	3-wire in, 041213, MaV/AJK	
D	E-type in, 2004-04-19, MaV/AJK	
C	TU in, 031203, MaV/AJK	