KONGSBERG

EA640

Hydrographic single beam echo sounder

Installation Manual

This manual provides you with information required to install the Kongsberg EA640 Hydrographic single beam echo sounder.The information is intended for qualified personnel such as shipyard engineers and skilled workers.

Caution

The EA640 echo sounder must never be powered up when the ship is in dry dock. The transducer will be damaged if it transmits in open air. To prevent inadvertent use of the EA640, disconnect the mains power whenever the vessel is in dry dock.

413764/B

Document information

- **Product**: Kongsberg EA640
- **Document**: Installation Manual
- **Document part number**: 413764
- **Revision**: B
- **Date of issue**: December 2018

Copyright

Warning

The equipment to which this manual applies must only be used for the purpose for which it was designed. Improper use or maintenance may cause damage to the equipment and/or injury to personnel. You must be familiar with the contents of the appropriate manuals before attempting to operate or work on the equipment.

Kongsberg Maritime disclaims any responsibility for damage or injury caused by improper installation, use or maintenance of the equipment.

Disclaimer

Kongsberg Maritime AS endeavours to ensure that all information in this document is correct and fairly stated, but does not accept liability for any errors or omissions.

Support information

If you require maintenance or repair, contact Kongsberg Maritime's support organisation. You can also contact us using the following address: km.hydrographic.support@kongsberg.com. If you need information about our other products, visit https://www.km.kongsberg.com.

Table of contents

About this manual

Purpose of manual

The purpose of this manual is to present the descriptions and drawings required to install the EA640 Hydrographic single beam echo sounder.

Target audience

The manual is intended for technical personnel; such as skilled shipyard workers, electricians, qualified engineers and naval architects. You must also be familiar with the installation of electronic and mechanical products.

Online information

For information about the EA640 and other products from Kongsberg Maritime, visit our website.

https://www.km.kongsberg.com

Registered trademarks

Observe the registered trademarks that apply.

Windows® is a registered trademark of Microsoft Corporation in the United States and other countries.

EA640

Topics

System description

EA640 is a high performance hydrographic wide band single beam echo sounder. The echo sounder is developed for hydrographic use in deep to medium depth waters.

For maximum flexibility and ease of operation, the EA640 echo sounders uses the Microsoft Windows® 7 operating system. The EA640 software can be run on any medium range Windows compatible commercial computer.

Wide band frequency sweep (FM) in combination with advanced signal processing gives an exceptionally good signal to noise ratio and range resolution.

The EA640 offers internal storage of all raw sample data. This includes all external input sensor data for replay purposes. A highly flexible processing regime makes it possible to log high density complex raw data for advanced post-processing. We recommend using an additional external storage device.

You can set up the display to suit your special needs. You can choose different presentations on the screen for echograms, digital depth and other features. Save user settings for different operations and use them again for similar operations.

EA640 supports a wide range of inputs from third party sensors and you can also export these data and data from EA640 to a wide range of different outputs.

Available frequencies span from 10 to 500 kHz. A variety of highly efficient transducers are available to suit all your operational needs from shallow to full water depths.

System diagram

The system diagram identifies the main components of a basic EA640 system. Only the main connections between the units are shown. Detailed interface capabilities and power cables are not shown.

The basic EA640 Hydrographic single beam echo sounder consists of one transducer and one WBT. Additional transceivers and transducers can be added to meet your operational and functional requirements. You also need a computer and a display. These can be delivered by Kongsberg Maritime or bought separately.

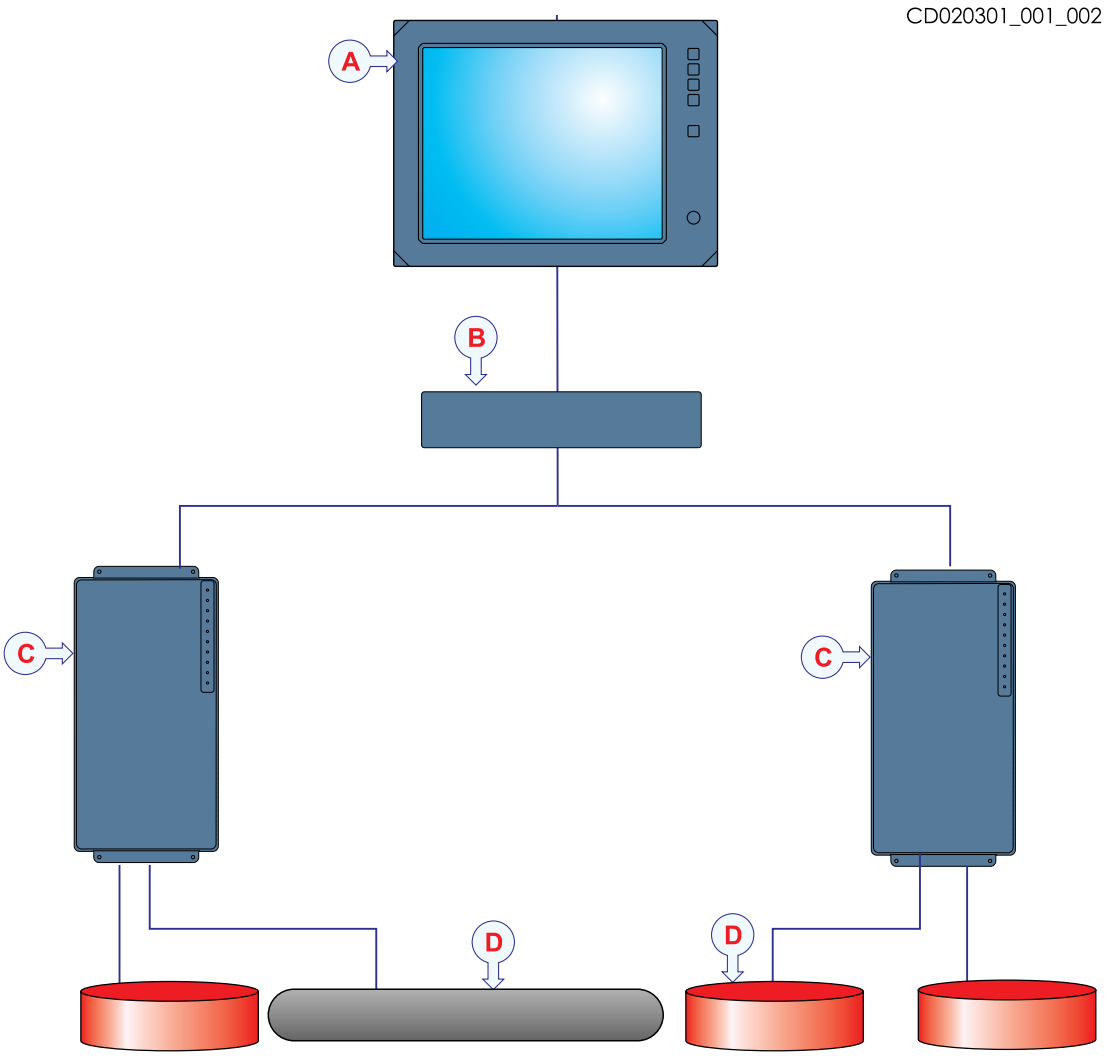

A *Operator Station*

B *Ethernet switch*

C *WBT*

D *Transducer*

System units

Topics

Operator Station description

The Operator Station may be a panel computer or a separate computer with a display.

The computer is based on a commercial design, but the software and hardware has been specified by Kongsberg Maritime to suit the EA640 requirements.

WBT description

The WBT is provided to transmit acoustic energy through water. This transmission and reception are commonly referred to as a *ping*. After each transmission, the transceiver receives the echoes from the targets in the water and/or the seabed. These echoes are filtered and amplified, and then converted to digital format.

The Wide Band Transceiver (WBT) comprises a rugged box providing all necessary transmitter and receiver electronics. The receiver is designed for low noise, and it can handle input signals spanning a very large instantaneous dynamic amplitude range.

A high quality Ethernet cable connects the Wide Band Transceiver (WBT) to the Operator Station. The distance between the Operator Station and the transceiver can be extended up to maximum 70 meters. If a longer cable is required, cut it in half, and insert an Ethernet switch to provide buffer amplification.

Note

If more than one Wide Band Transceiver (WBT) is used, a small high capacity Ethernet switch is required to connect the transceivers to the Operator Station.

The Wide Band Transceiver (WBT) requires an external power supply offering 12 to 15 Vdc, minimum 5 A. A suitable power supply is provided with the delivery. The transceiver can also be powered by a large capacity battery.

Single-beam transducers

The EA640 Hydrographic single beam echo sounder can be used with our efficient single-beam transducers.

Kongsberg Maritime can provide a large range of efficient and accurate single-beam transducers for underwater mapping applications. A large number of operational frequencies is available. For more information about Kongsberg Maritime transducers, see our website.

https://www.km.kongsberg.com

The installation of the transducer (or transducers) is not described in detail in this manual. See the documentation provided with each transducer.

Scope of supply

Topics

Basic items provided with a standard delivery, page 11

Basic items provided with a standard delivery

To assemble a complete EA640 system, you will need a set of system units. The main units required are provided with the standard delivery.

When you unpack the parts provided with the EA640 delivery, make sure that the following items are included.

WBT

- 1 WBT
- 1 Power supply
- 1 Power cable
- 1 4–pin ConX connector — For battery or UPS
- 1 Ethernet cable
- 1 6–pin PCB connector
- 2 4–pin PCB connectors
- 1 Panel cover
- 2 Cable glands – For cables with diameter 8 - 12 mm
- 3 Cable glands – For cables with diameter 5.5 - 9.5 mm
- 3 Blind plugs
- 4 Nuts

Transducers

A large range of transducers is available for the different operational frequencies. For order numbers, see our website.

Transducers	Frequency (kHz)	Beamwidth (degrees)	Cable length (m)
12–16/60	12	16x16	20
15–17	15	17x17	15
18–11	18	11x11	20
38–7	38	7x7	20
38–9	38	9x9	20

Transducers	Frequency (kHz)	Beamwidth (degrees)	Cable length (m)
50–18	50	18x18	20
50–7	50	7x7	20
120–25	120	10x10	25
200 kHz Side scan	200	0.5x49	20
200–9G	200	9	15
200–28E	200	7x7	25
200–35	200	3x3	25
38/200 Combi D	38/200	13x21/7x7	15
50/200 Combi D	50/200	10x16/7x7	15
500 Side scan	500	0.5x60	15
500–3G	500	3	10

Operator Station

Contact your Kongsberg Maritime representative for information about the current model that is delivered with your EA640 system.

Operational software

Operational software is provided on a suitable media. If the Operator Station is purchased from Kongsberg Maritime, the operational software is installed on the Operator Station, and ready for use.

End user documentation

End-user documentation is provided on paper and/or digital formats. All documentation related to operation and installation can be downloaded from our website.

https://www.km.kongsberg.com

Installation requirements

Topics

Supply power requirements

Observe the general requirements related to the supply power.

The supply voltage to the equipment must kept within ±10% of the installation's nominal voltage.

Maximum transient voltage variations on the main switchboard's bus-bars are not to exceed -15% to +20% of the nominal voltage (except under fault conditions).

- **Make and model**: Kongsberg WBT
- **Voltage requirement**: 12 – 15 VDC, 5A
- **Power supply**:
  - **Voltage requirement**: 115/230 VAC, 47 to 63 Hz, single phase, nominal
  - **Maximum voltage deviation**: 15%
  - **Maximum transient**: 20% of nominal voltage, recovery time 3 s
  - **Power consumption**: 100 VA (Approximately)

Cables and wiring requirements

Correct wiring is crucial for the operational performance of the EA640.

All cables running between system cabinets located in different rooms and/or on different decks must be supported and protected along their entire lengths using conduits and/or cable trays. Note that the cables must not be installed in the vicinity of high-power supplies and cables, antenna cables or other possible sources of interference.

All transducer cables must be run in steel conduits.

For more detailed information about cables and wiring, refer to the basic cable requirements.

Compass deviation requirements

EA640 units that are installed on the bridge may have an effect on the compass.

Once the installation is complete, the vessel must be swung with the EA640 in both operative and inoperative modes.

The shipowner and captain are responsible for updating the compass deviation table accordingly with regard to the vessel's national registry and corresponding maritime authority.

Noise sources

The operational performance of the EA640 Hydrographic single beam echo sounder depends on the noise conditions. It is essential that the noise signature is as low as possible.

The vessel's hull, rudder(s) and propeller(s) must be thoroughly inspected in dry dock prior to installation.

Roughness below the water-line deformities in the shell plating and protruding obstacles can create underwater noise. These sources of turbulence must be smoothed or removed as best as possible.

Note

It is especially important that the propeller(s) are not pitted or damaged.

Network security

If a EA640 system is connected to a local area network, data security is important.

Equipment manufactured by Kongsberg Maritime is frequently connected to the vessel's local area network (LAN). When you connect a computer to a local area network you will always expose the data on that computer. All other computers connected to the same network may be able to access your data. Several threats may immediately occur:

- Remote computers can read the data.
- Remote computers can change the data.
- Remote computers can change the behaviour of the computer, for example by installing unwanted software.

Usually, two parameters are used to define the threat level:

1. The likelihood that any remote connection will do any of the above.
2. The damage done if a remote connection succeeds doing this.

Kongsberg Maritime has no information regarding the complete system installation on any vessel. Systems provided by Kongsberg Maritime are regarded as stand-alone offline

systems. They are stand-alone even though they may be connected to a network for sensor interfaces and/or data distribution.

Note

No network safety applications are installed on any Kongsberg Maritime computers. The computers are thus not protected against viruses, malware or unintentional access from external users.

Securing the EA640 system itself has no meaning unless there is a policy in place that secures all computers in the network. This policy must include physical access by trained and trusted users. The customer/end user of the EA640 system will always be in charge of defining and implementing a security policy, and providing the relevant network security applications.

Note

Kongsberg Maritime will not accept any responsibility for errors and/or damages caused by unauthorized use or access to the EA640.

If you wish to connect the EA640 system to the ship's local area network, you must implement the same security mechanisms on the EA640 computer(s) as for the rest of the network. This is a task for the network responsible person on board. Some key elements here must be:

- The same anti-virus protection on all computers, including routines for updating this protection.
- The same settings for the firewall on all computers.
- Controlled physical access to computers on the network.
- Trusted and trained operators.
- Log-in access mechanisms.
- Same policy for attaching peripheral equipment to the computers (USB devices, hard drives etc).
- Installation of programs on any computer in the network, verification that each program is authentic.
- Definition of which programs are allowed to run on each computer.
- Logging mechanism of computer activity, and inspection of these logs.

How to define and implement these rules depends on each end user's network system configuration, which again must be a result of the policies and threat levels the end user has defined for the complete installation. For some products the network consists of only processor units and/or work stations, transceivers and a few sensors. On other vessels, larger computer systems can be installed to include numerous products and data systems. There must be one responsible person for the security of the system, large or small.

Support information

Should you need technical support for your EA640 you must contact a Kongsberg Maritime office. A list of all our offices is provided on our website. You can also contact our main support office in Norway.

- **Company name**: Kongsberg Maritime AS
- **Address**: Strandpromenaden 50, 3190 Horten, Norway
- **Telephone (24h support)**: +47 33 03 24 07
- **Website**: https://www.km.kongsberg.com
- **E-mail address**: km.hydrographic.support@kongsberg.com

Preparations

Topics

Installation summary

Installation of the EA640 is a demanding task that requires careful preparations, a number of specific procedures, wiring and required system settings.

Context

An overall installation procedure is provided.

Note

In order to obtain maximum safety and EA640 performance, it is very important that the installation procedures in this manual are complied to. You must do the tasks in the order they are described. The vessel owner must make sure that the installation shipyard holds the applicable competence to perform the installation, and that the applicable maritime authorities are available to verify and certify the installation.

Procedure

1. Determine the physical location of the transducer (or transducers).

   Necessary considerations must be taken to avoid acoustic and electric disturbances.

2. Install each transducer.

   Each transducer will penetrate the hull. For this reason, this is a crucial part of the installation. The installation shipyard must provide all necessary design and installation drawings, as well as the relevant work standards and mounting procedures. If required, all documents provided by the shipyard for the physical installation of the EA640 must be approved by the vessel's national registry and corresponding maritime authority and/or classification society. Such approval must be obtained before the installation can begin. The shipowner and shipyard doing the installation are responsible for obtaining and paying for such approval.

3. Install the EA640 system units.

   Note that some EA640 system units may be commercial. Unless ordered specifically these are not included in the delivery, and must be purchased locally.

4. Install the cables between the EA640 system units.

   Observe the relevant cable plan, procedures, as well as the general requirements for cabling.

5. Power up the EA640 for the first time, and set it to work.

   Note

   In order to power up of the EA640 in a safe and correct manner, the relevant procedures must be complied to!

6. Connect the peripheral units.

7. Do a complete EA640 system test.

About installation drawings

The installation shipyard must provide all necessary design and installation drawings, as well as the relevant work standards and mounting procedures.

Note

If required, all documents provided by the shipyard for the physical installation of the EA640 must be approved by the vessel's national registry and corresponding maritime authority and/or classification society. Such approval must be obtained before the installation can begin. The shipowner and shipyard doing the installation are responsible for obtaining and paying for such approval.

Kongsberg Maritime offers free advice for installation planning. Proposed arrangements may be sent for commentary or suggestions. The following drawings should be submitted should assistance be requested:

- General arrangement
- Body plan and drawings of the relevant compartment
- Lines plan

Tools, equipment and consumables required for EA640 installation

In order to do the EA640 installation, all necessary tools and equipment for mechanical work, cabinet installation and electrical wiring must be available.

It is not practical to provide a detailed list of all necessary tools and equipment. You must be equipped with a standard set of tools. This tool set must comprise the normal tools for electronic and electromechanical tasks. This includes different screwdriver types, pliers, spanners, a cable stripper, a soldering iron, etc. Each tool must be provided in various sizes. We recommend that all tools are demagnetized to protect your equipment. However, you must make sure that the following specialized tools are available.

- All necessary tools and consumables required for welding
- All necessary tools and consumables required for physical installation of units, cabinets and racks
- All necessary tools and consumables required for electrical installations

Where to install the transducer

Topics

Introduction to transducer location

A single answer to the question "where to install the transducer" cannot be given.

The physical location of the transducer depends on the vessel's design and construction, how the hull is shaped, and how the water runs along the hull. There are however a number of important guidelines, and some of these are even conflicting.

Note

The information here must be considered as general advice. Each EA640 installation must be handled separately depending on the hull design and the other electrical and mechanical systems installed on the vessel.

Mount the transducer deep

In order to achieve the best possible EA640 performance, mount the transducer as deep as possible under the vessel’s hull.

There are several reasons for this recommendation.

Flow noise

Consider the situations when the vessel is unloaded, and pitching in heavy seas. The vessel is riding high, and the bow may even be lifted out of the water. This will cause a lot of air to follow the shape of the hull.

The upper water layers of the sea contain a myriad of small air bubbles created by the breaking waves. In heavy seas the upper 5 to 10 metres may be filled with air, and the highest concentrations will be near the surface. Air bubbles absorb and reflect the sound energy, and they may in worst cases block the sound transmission altogether.

Cavitation

Cavitation is the formation of small air bubbles close to the transducer face. The bubbles appear because the local pressure becomes negative during parts of the acoustic pressure cycles. The cavitation threshold increases with the hydrostatic pressure. The noise is made when the bubbles implode.

Transmitting in air

The transducer must never be lifted free of the water surface. If the transducer is activated when out of water it may be damaged beyond repair. Mounting the transducer at a deep position on the hull will in normally prevent this.

Slamming

Slamming happens if the vessel hull climbs out of the water in heavy seas. The force of the water when the hull falls down may push the transducer up, and may cause damage both to the transducer and to its mounting. This is especially important for low frequency transducers with large faces. The effect of slamming can be reduced by mounting the transducer as deep as possible on the hull.

Note

Kongsberg Maritime AS takes no responsibility for any damages to the transducer, the cable or the mounting arrangement, caused by slamming.

Avoid protruding objects near the transducer

Objects protruding from the hull will generate turbulence and flow noise. This will reduce the EA640 performance.

Protruding objects may be zinc anodes, transducers or even the vessel's keel. Holes and pipe outlets are also important noise sources, as well as rough surfaces caused by bad welding. Even traces of sealing compound, sharp edges, bolts or empty bolt holes will create noise. All these protruding objects may act as resonant cavities amplifying the flow noise at certain frequencies.

Do not place a transducer in the vicinity of protruding objects, and especially not close behind them. Make sure that the surface of the transducer face, the hull plating and putty around the transducer is as even and smooth as possible. Mounting screws or bolts must not be extruding from the transducer, the installation hardware or the hull plating. If necessary, grind and polish all surfaces.

Keep the transducer far away from the propellers

The propulsion propellers is the dominant noise source on most vessels. The noise is easily transmitted through the water. This noise may often reduce the overall performance of your EA640.

The transducer must be installed as far away from the propellers as possible. The best positions are therefore on the fore part of the hull. Positions outside the direct line of sight from the propellers are best.

On small vessels we recommend mounting the transducer on that side of the keel where the propeller blades move *upwards*. This is because the propeller cavitation is weakest on that side. The cavitation starts when the water flows in the same direction as the propeller blades. This is where the propeller blades move downwards.

Mount the transducer at a safe distance from bow thruster(s)

Bow thruster propellers are extremely noisy. When you decide where to place the transducer, you must consider the noise created by most bow thrusters.

When in operation, the noise and cavitation bubbles created by the thruster may make your EA640 Hydrographic single beam echo sounder useless, almost no matter where the transducer is installed. When the bow thrusters are *not* in operation, the tunnel creates turbulence. If your vessel is pitching, the tunnel may be filled with air or aerated water in the upper position and release this in the lower position.

In general, the transducer should therefore be placed well away from the bow thruster(s).

However, this is not an invariable rule. Certain thruster designs - combined with their physical locations on the hull - may still offer a suitable location for the transducer, even close to the thruster. If you are in doubt, consult a naval architect.

Summary and general recommendations

Some of the installation guidelines provided for transducer location may be conflicting. For this reason, each vessel must be treated individually in order to find the best compromise.

In general, the most important factor is to avoid air bubbles in front of the transducer face. For this reason, the recommended transducer location is normally in the fore part of the hull, well ahead of the noise created by the bow wave.

The maximum distance from the bow is normally equal to one third of the total water line length of the hull.

Note

Mounting the transducer more than 10–15 meters from the bow may cause problems with the turbulent flow.

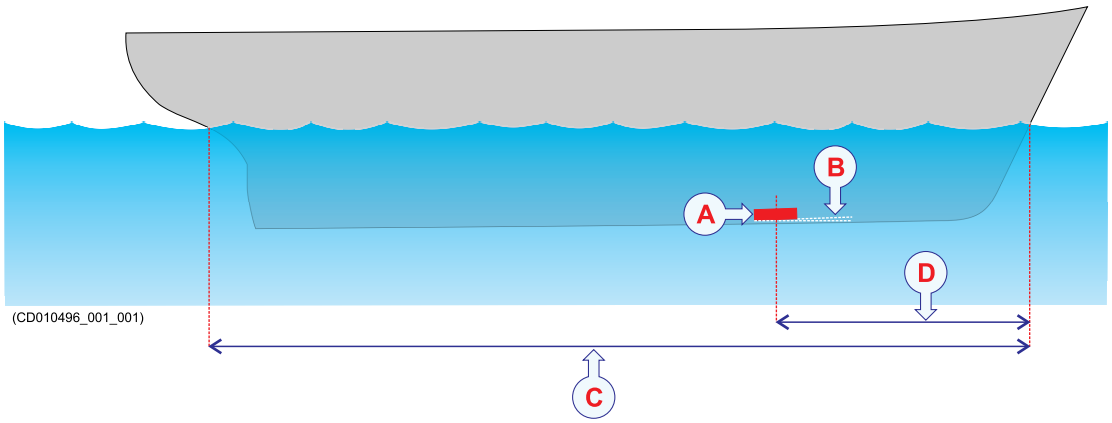

A *Transducer*

B *Inclination angle*

C *Hull length at water line*

D *Maximum 1/3 of the hull length at water line (C)*

If the vessel hull has a bulbous bow, this may well be a good transducer location, but also in this case the flow pattern of the aerated water must be taken into consideration. The foremost part of the bulb is often a good location.

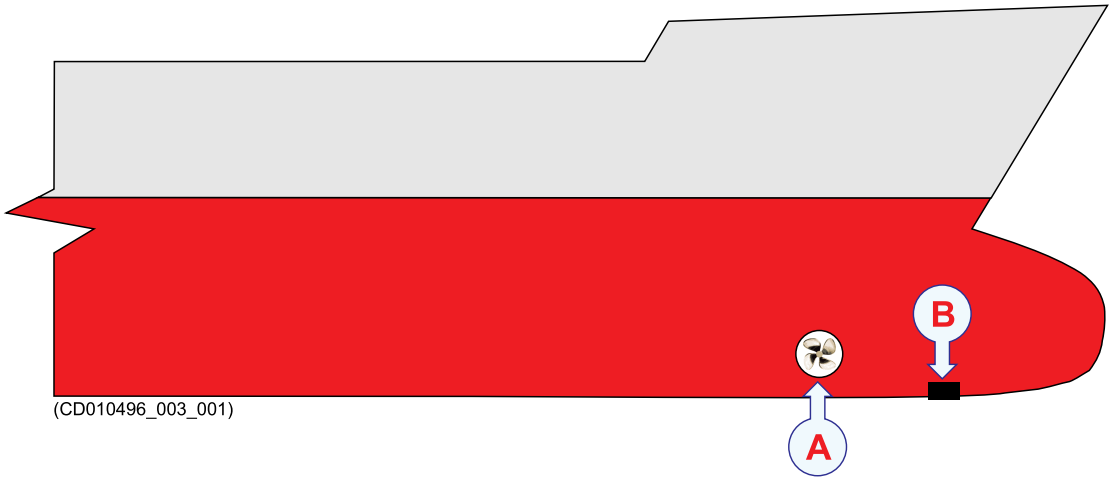

A *Thruster*

B *Transducer location*

This applies to the vessel in normal trim and speed.

Important

The transducer must never be tilted backwards when the vessel is moving at normal speed.

Do not place a transducer in the vicinity of protruding objects, and especially not close behind them.

Make sure that the surface of the resulting installation is as smooth and streamlined as possible.

Acoustic noise

Topics

Contributing factors

Several factors are contributing to the performance of the hydroacoustic equipment used on board a vessel.

Factors contributing to the performance of the hydroacoustic equipment used on board a vessel are:

- The quality and properties of the transmitted signal
- The quality of the receiving system
- The operational settings made during operation
- The properties of the target(s)
- The signal-to-noise ratio

The majority of these factors can neither be controlled nor improved by means of installation methods or transducer locations. The quality and properties of the transmitting and receiving systems are key factors during our product development, while our end user documentation aims to help the user to make the right filter settings during operation. As for the target properties, there is nothing any of us can do with those.

The *signal-to-noise ratio*, however, can be improved by making the correct choices during installation.

> Signal-to-noise ratio (often abbreviated SNR or S/N) is a measure used in science and engineering that compares the level of a desired signal to the level of background noise. It is defined as the ratio of signal power to the noise power, often expressed in decibels. A ratio higher than 1:1 (greater than 0 dB) indicates more signal than noise. While SNR is commonly quoted for electrical signals, it can be applied to any form of signal [...].
>
> *http://en.wikipedia.org/wiki/Signal_to_noise_ratio (September 2013)*

The *signal* is the echo that we want to know something about, while the *noise* is any unwanted signals or disturbances. The echo must be detected in the noise and therefore it

is necessary to keep the noise level is as low as possible in order to obtain long range and dependable interpretation.

The noise that contributes to the signal to noise ratio may be divided into the following types of noise:

- Self noise
- Ambient noise
- Electrical noise
- Reverberation

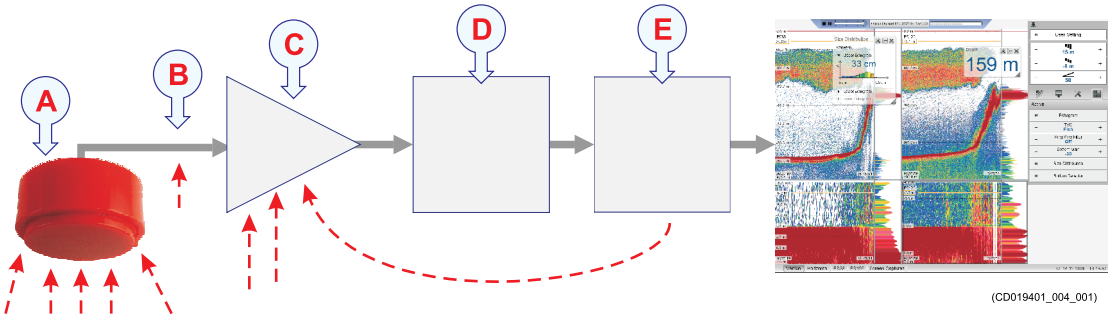

A The transducer can pick up noise from

- Biological disturbances
- Interference
- Cavitation
- Propeller noise
- Flow noise
- Acoustic noise from other hydroacoustic systems

B The transducer cable is long, and may pick up electric noise from generators, pumps, cooling systems and other electric or electromechanical devices.

C The preamplifiers are very sensitive, and they can easily pick up electrical noise from internal and external power supplies. The preamplifiers are also vulnerable for analogue noise created by their own electronic circuitry. Digital noise created by the converter and processing circuitry can also create problems.

D Converters transform the analogue echoes to digital format.

E Signal processing circuitry can create digital noise.

Self noise

Any vessel equipped with a hydroacoustic system (for example echo sounder or sonar) will produce more or less self noise.

There are many sources of such self noise. We will here go into some details in order to analyse the different sources of self noise on a vessel and how they may influence upon the noise level of the hydroacoustic instruments.

Machinery noise

The main contributor to machinery noise is usually the main engine on board the vessel. The contribution from auxiliary machinery may, however, be considerable, especially if it is in poor shape. The machinery noise can be transmitted to the transducer as:

- Structure-borne noise through the ship structure and the transducer mountings
- Water-borne noise through the hull into the water to the transducer

Electrical noise

Modern vessels are normally equipped with a lot of electric instruments such as hydroacoustic systems, radars, navigation systems, and communication equipment. Any electric instruments may in some cause electrical interference and noise. International regulations and certifications are used to control and reduce this, but even these are limited if the electrical systems are poorly installed and/or maintained.

Propeller noise

Propeller noise is often the main source of noise at higher vessel speeds. Variable pitch propellers or fast moving propellers usually make more noise than fixed propellers or slow moving propellers.

Propeller noise is usually water-borne. In some cases, however, shaft vibrations or vibrations in the hull near the propeller may be structure-borne to the transducer. If a propeller blade is damaged, this may increase the noise considerably.

Propeller cavitation is a severe source of noise. "Singing" propellers might be a source of noise, which interferes at discrete frequencies. In some cases static discharge from the rotating propeller shaft may be quite disturbing.

Cavitation

Cavitation is the formation of small air bubbles close to the transducer face. The bubbles appear because the local pressure becomes negative during parts of the acoustic pressure cycles. The cavitation threshold increases with the hydrostatic pressure. The noise is made when the bubbles implode.

Cavitation noise may appear near extruding objects at higher speeds, but more often it is

caused by the propellers. Propeller cavitation is a severe source of noise. The cavitation starts when the water flows in the same direction as the propeller blades. This is where the propeller blades move downwards.

In some cases a resonant phenomenon is set up in a hole near the hull. This sound will have a discrete frequency, while all other flow noise will have a wide frequency spectrum.

(Image from U. S. Navy in the public domain.)

Flow noise

The upper water layers of the sea contain a myriad of small air bubbles created by the breaking waves. When the hull moves through water it will cause a disturbance, and this will generate friction. The friction zone is called the *flow boundary layer*. The flow in this boundary layer may be *laminar* or *turbulent*.

- The *laminar* flow is a nicely ordered, parallel movement of the water.
- The *turbulent* flow is a disorderly flow pattern, full of eddies.

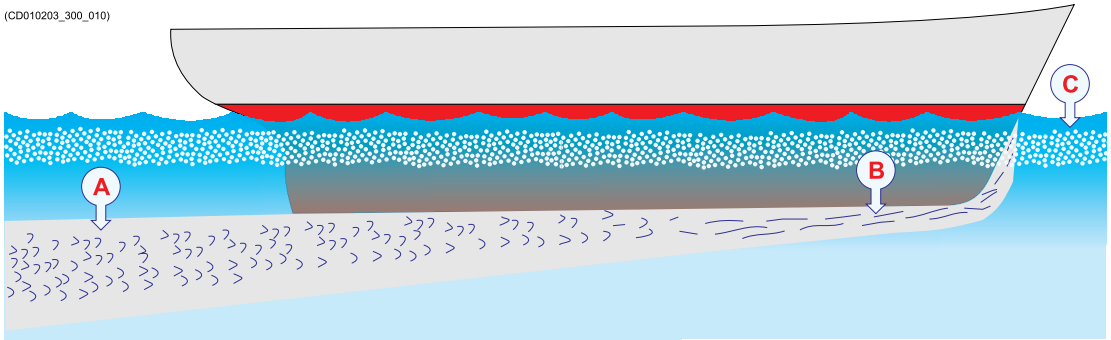

A *Turbulent flow*

B *Laminar flow*

C *Air bubbles*

Air bubbles absorb and reflect the sound energy, and they may in worst cases block the sound transmission altogether.

The boundary layer increases in thickness when it becomes turbulent. The boundary layer is thin in the forward part of the vessel hull, and increases as it moves aft. The thickness depends on ships speed and on the roughness of the hull. All objects sticking out from the hull, or dents in the hull, will disturb the flow and will increase the thickness of the boundary layer. When the flow speed is high, the turbulence can be violent enough to destroy the integrity of the water. Small voids or cavities in the water will occur and this is called cavitation.

Rattle noise

Rattle noise may be caused by loose objects in the vicinity of the transducer, like fixing bolts. The rattle may also come from loose objects inside the hull.

Interference

Interference from other hydroacoustic equipment on board the same vessel may be an annoying source of disturbance. Unless the same frequency is used for more than one piece of equipment only the transmitted pulse will contribute to the interference.

> In physics, interference is the phenomenon in which two waves superpose each other to form a resultant wave of greater or lower amplitude. Interference usually refers to the interaction of waves that are correlated or coherent with each other, either because they come from the same source or because they have the same or nearly the same frequency. Interference effects can be observed with all types of waves, for example, light, radio, acoustic, surface water waves or matter waves.
>
> *https://en.wikipedia.org/wiki/Interference_(wave_propagation), April 2016*

Ambient noise

Ambient noise is usually not a limiting factor to the performance of sonars and echo sounders.

The ambient noise may be split up as follows:

- **Sea noise**: Air bubbles, seismic disturbances, waves, boundary turbulence, etc.
- **Biological noise**: Fish, mammals
- **Man made noise**: Other vessels, interference
- **Precipitation noise**: Heavy rain or hail

In some areas, where many vessels operate together, the engine and propeller noise from other vessels may be disturbing. Interference from hydroacoustic instruments located in other vessels may also be a limiting factor. The sea noise depends on the weather conditions. In bad weather the sea noise can be quite high due to the waves.

Electrical self noise

Electrical or electronic self noise is picked up or generated in any other part of the equipment than the transducer.

Hum picked up by the transducer cables or picked up from the power supply is usually the most common source of electrical self noise. At higher frequencies – where rather wide bandwidths are necessary – the noise from components, transistors or other analogue electronic may be a limiting factor.

Some means to reduce acoustic noise

Several factors are contributing to the performance of the hydroacoustic equipment used on board a vessel. Careful planning of the EA640 installation may reduce the acoustic noise.

Unfortunately, it is impossible to simply provide a number of specific procedures to reduce the noise.

An important factor is the physical location of the transducers. This depends on the vessel's design and construction, how the hull is shaped, and how the water runs along the hull. Other factors deal with other equipment mounted on board, and this will also be vessel dependant. At moderate ship speeds the machinery noise is usually dominant. At medium speeds the flow noise increases more rapidly and takes over, while at higher speed the propeller noise will be the main contributor.

Note

The information here must be considered as general advice. Each EA640 installation must be handled separately depending on the hull design and the other electrical and mechanical systems installed on the vessel.

Reducing flow noise

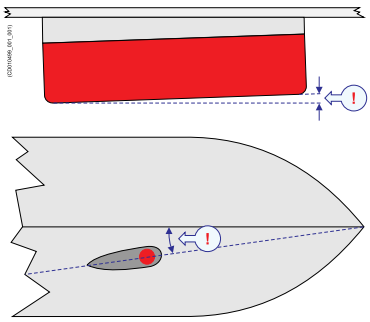

- The shape of the transducer (or dome around it) must be as streamlined as possible.
- The hull plating in front of the transducer must be as smooth as possible.

  Important

  Be especially aware of bilge keels and zinc alloy anodes. The keel must be rounded off without sharp edges. Neither extruding objects nor abrupt transitions must be present.

- Each transducer must be mounted with a small inclination angle (approximately 2 degrees).

Reducing machinery noise

- Each transducer must be installed as far away from the engine room as possible.
- The main engine and relevant auxiliary engines and equipment must be fixed to rigid foundations to avoid vibrations.
- Any hull structure that may vibrate should be damped or coated to reduce the vibrations.

The use of shock absorbers or floating rafts may sometimes reduce this noise. The structure-borne noise may be reduced by isolation, for example by providing vibration clamping between the transducer and the hull structure.

Reducing propeller noise

- Each transducer must be installed as far away from the propellers as possible.
- Sufficient clearance between the propellers and the hull, the rudder and the keel must be provided.
- Place the zinc alloy anodes in places where the water flow is the least disturbed.
- Ensure that the propellers blades are correctly designed and without damages.
- The use of a baffle between the propellers and the transducer may reduce noise appreciably.
- Static discharges caused by the rotating propeller shaft may be removed by proper grounding or by mounting a coal brush from the shaft to vessel ground.

Reducing rattle noise

Ensure that no parts near the transducers can rattle as a result of water flow or vibrations.

Reducing interference

Interference from the transmission pulses from other hydroacoustic instruments on board the vessel is difficult to avoid. The problem may be reduced by choosing the working frequencies carefully and to some extent by separating the different transducers. On vessels with a large number of separate hydroacoustic systems installed and in simultaneous use, a separate synchronizing system (for example the K-Sync) should be considered.

Reducing electrical noise

- Place the transducer cables in a metal conduit from the transducer to the WBT. Terminate the conduit as close to the transducers and WBT as possible.
- Make sure that all units are properly grounded, as this is important to avoid electrical noise.
- Use shielded cables with correct grounding.
- Separate EA640 cables from other cables with high voltages, large currents or transients. Place all high voltage power cables in metal conduits.

Installing the EA640 hardware units

Topics

Installing the WBT using the integrated brackets

The EA640 WBT is normally positioned in a dedicated room in the vicinity of the transducer. The physical length of the cable limits the distance between the transducer and the WBT. The WBT can be installed vertically or horizontally using the integrated mounting brackets. Four bolts are used, two on each side.

Prerequisites

A suitable location for the WBT must be defined prior to installation. We recommend that it is mounted as close to the transducers as possible. The unit can in principle be mounted anywhere on board the ship, provided that the location is dry and ventilated.

The length of the transducer cables limits where the WBT can be installed.

The unit can be mounted in any direction and on any surface provided that the environmental requirements are met.

Note

If you mount the WBT on a bulkhead, position the unit so that all the connections are facing down.

Procedure

1 Place the WBT in the selected position.

2 Secure the unit using four 5 mm bolts.

Make sure the cable connections are facing down if the unit is installed on a bulkhead or wall.

3 Connect the cables.

Note

When you connect the cables, make sure that they are all properly secured, and able to withstand the vibration and movements of the vessel.

Installing the WBT in a 19" cabinet

The WBT can be installed in a 19-inch cabinet by means of an optional drawer. You will need one drawer for each WBT unit.

Prerequisites

It is assumed that the WBT Cabinet has already been installed.

Context

If your EA640 comprises more than one WBT, you can use the optional WBT Cabinet. This 19" cabinet holds maximum seven WBTs with power supplies, as well as an Ethernet switch and a power distribution panel. Each WBT is then installed on a dedicated WBT Drawer in the rack.

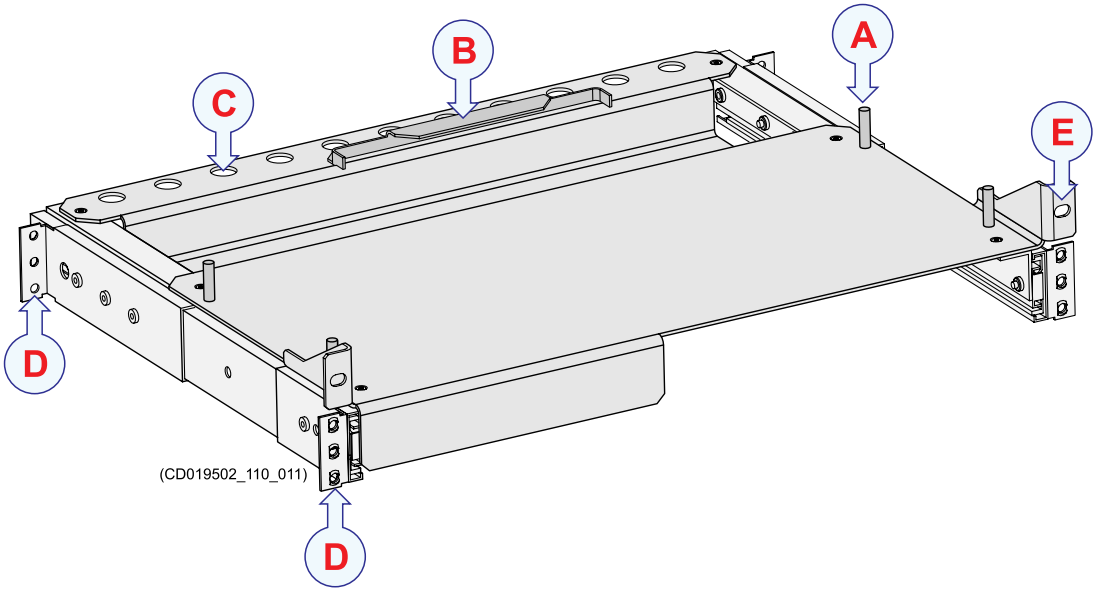

A *Mounting bolts for the WBT*

B *Mounting bracket for the power supply*

C *Holes for fastening and securing the cables*

D *Mounting bolts for the drawer assembly*

E *Mounting bolts for the drawer*

Procedure

1 Place the WBT on the WBT Drawer.

2 Mount the transceiver and the power supply using the brackets, bolts and nuts provided.

3 Mount the WBT Drawer into the 19-inch cabinet.

4 Connect the cables.

Note

When you connect the cables, make sure that they are all properly secured, and able to withstand the vibration and movements of the vessel.

Installing a commercial computer

The Operator Station can be installed inside a console, inside a suitable cabinet, in a 19" rack or on a desk. Make sure that adequate ventilation is available to avoid overheating.

Prerequisites

You must be equipped with a standard set of tools. This tool set must comprise the normal tools for electronic and electromechanical tasks. This includes different screwdriver types, pliers, spanners, a cable stripper, a soldering iron, etc. Each tool must be provided in various sizes. We recommend that all tools are demagnetized to protect your equipment.

A suitable location for the computer must be defined prior to installation. Observe the compass safe distance.

Context

For installation of a commercial computer, refer to the manual supplied by the manufacturer.

Note

Make sure that the chosen computer meets the EA640 requirements. The design and construction must allow for marine use, and the computer must be able to withstand the movements and vibrations normally experienced on a vessel. Verify that you have easy access to cables and connectors, and that the computer can be installed in a safe and secure way.

Standard office computers may not be well fitted for maritime use. The motions and vibrations experienced on a vessel may reduce the computer lifetime considerably. While installing a commercial computer, use your common sense to improve the installation method suggested by the manufacturer.

Procedure

1 Prepare the location and the necessary tools.

2 Observe the installation requirements.

a Depending on its physical properties, install the computer inside a console, in a cabinet or 19” rack, or on a desk.

b Choose a position to fit the available cable lengths between the computer and the other units it connects to.

c Observe the compass safe distance.

d Make sure that enough space is made available for maintenance purposes.

e Make sure that adequate ventilation is available to avoid overheating.

f Make sure that the installation method allows for the physical vibration, movements and forces normally experienced on a vessel.

Note

In order to allow for future maintenance, we recommend to mount the unit with its cables and connectors available for easy access.

3 Make sure that the chosen location meets the installation requirements.

4 Provide ample space around the computer.

You must be able to reach and use the front and rear mounted connectors and devices. It is also important that you allow for easy access to all the cables, and enough space for inspection, maintenance and parts replacement. If relevant, make sure that the space allows you to open the computer for unobstructed access to its internal parts.

Note

Make sure that you can access both the rear and front side of the computer after it has been installed.

5 Install the computer.

Observe the applicable documentation provided by the manufacturer.

6 Connect the cables.

Note

When you connect the cables, make sure that they are all properly secured, and able to withstand the vibration and movements of the vessel.

Mounting the WBT Cabinet

The WBT Cabinet is a customized 19"-inch instrument rack fitted with powerful shock absorbers. The cabinet can contain maximum seven custom drawers, and each of these will hold one WBT and its power supply. An Ethernet switch and a power distributor panel are included the bottom of the cabinet.

Prerequisites

We assume that you are equipped with a standard set of tools. This tool set must comprise the normal tools for electronic and electromechanical tasks. This includes different screwdriver types, pliers, spanners, a cable stripper, a soldering iron, etc. Each tool must be provided in various sizes. We recommend that all tools are demagnetized to protect your equipment. The following specific tools are required for this task:

- Power drill
- Welding equipment

We recommend that you install the WBT Cabinet before you install the WBT Drawers and the transceivers.

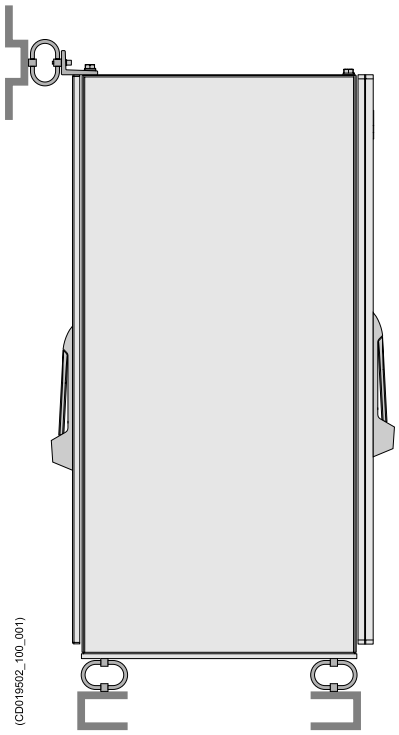

Use bulkhead support bracket(s) to make installation easier, and/or "U" shaped profiles to make more space for cables under the cabinet.

Context

The cabinet is mounted on the shock absorbers. It is mounted on the deck, and secured against a bulkhead. Alternatively, you can place it next to other similar cabinets, and use these for support.

If required for easier cable access, the cabinet can be lifted up from the deck by placing "U" shaped steel profiles under the shock absorbers. Additional distance from the bulkhead can be obtained by designing and installing suitable mounting brackets.

The installation of the cabinet must be planned and prepared by the installation shipyard in close cooperation with the end user. Relevant installation drawings with mounting details must be provided by the shipyard.

Verify that the location meets the environmental requirements defined for the EA640.

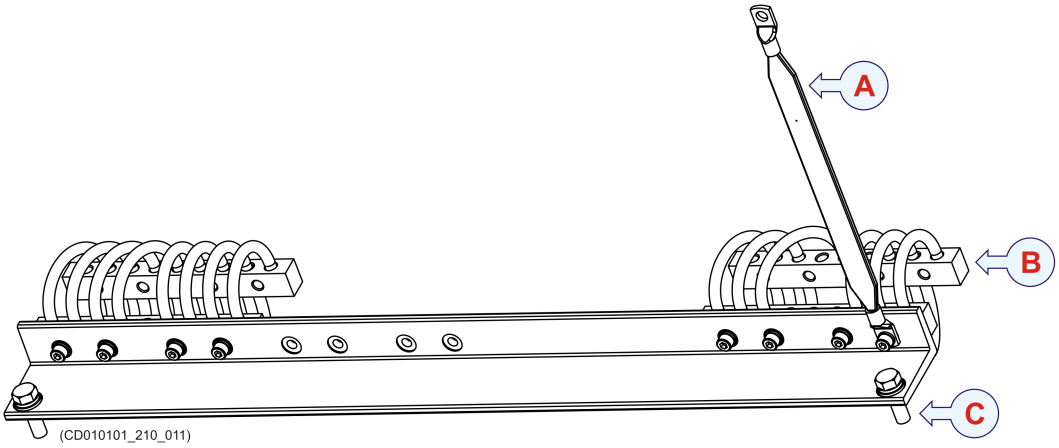

A *Earth strap*

B *Bolt this shock absorber to the bulkhead.*

C *Secure the shock absorber assembly to the top of the cabinet using these two bolts.*

All cables will enter through the bottom and/or the top of the cabinet.

Procedure

1 Prepare the installation of the cabinet.

a Observe the outline dimensions drawing.

The drawing is located in the *Drawing file* chapter in this manual.

Note

The outline dimensions drawing shows the initial size of an empty cabinet. When the cabinet is completed for normal operation, the weight will compress the bottom shock absorbers slightly. You must take this into consideration when you plan the mounting.

b Determine the location of the unit.

c Verify that the location meets the sonar room requirements

d Verify that the location meets the environmental requirements defined for the EA640.

e Verify that the location is within range of the transducer cables.

f Verify that the location offers ample space around the cabinet to allow for cables, maintenance and parts replacement.

g Determine the installation method.

h Make all necessary installation drawings.

i If relevant, design and manufacture bulkhead support bracket(s) and/or "U" shaped steel profiles.

Note

The use of "U" shaped profiles and bulkhead support bracket(s) is optional.

2 Mount the "U" shaped profiles.
   a Design, manufacture and mount the U-shaped steel profiles.
   b Make sure that the profiles can withstand the full weight of the cabinet.
   c Make the required mounting holes to accept the bottom frame (with shock absorbers).
   d Position the profiles on the deck, and mount them using bolts or welds.
3 Mount the bottom frame.

   The bottom frame is fitted with four shock absorbers. If you have used U-shaped profiles, place the frame on top of these.
4 Mount the bulkhead support bracket.
   a Design and manufacture the bulkhead bracket.
   b Make the required mounting holes to accept the top shock absorbers.
   c Position the brackets on the bulkhead, and mount them using bolts or welds.
5 Mount the top shock absorber assembly.
   a Remove the four lifting lugs.
   b Mount the top shock absorber assembly using two of the same holes.
   c Use spare bolts to close the remaining lifting lug holes.
6 Place cabinet in its correct position on the bottom frame.
   a Use four bolts through the bottom frame to secure the cabinet.
   b Mount the top shock absorbers to the bulkhead support bracket(s).
7 Fasten the earth strap.

Mounting the drawers in the WBT Cabinet

The WBT Cabinet can contain maximum seven custom drawers. Each drawer will hold one WBT and its power supply. The drawer is mounted in the same way as any other equipment designed for 19" racks using standard tools.

Prerequisites

You must be equipped with a standard set of tools. This tool set must comprise the normal tools for electronic and electromechanical tasks. This includes different screwdriver types, pliers, spanners, a cable stripper, a soldering iron, etc. Each tool must be provided in various sizes. We recommend that all tools are demagnetized to protect your equipment.

Context

We recommend that you mount all the empty drawers into the WBT Cabinet before you mount the WBT unit on each drawer.

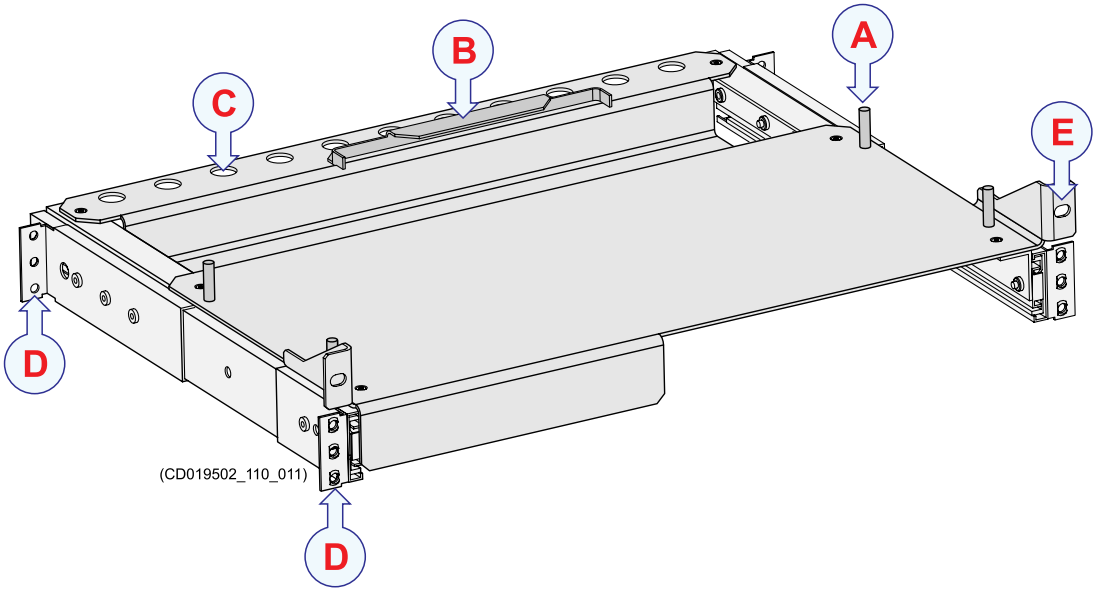

A *Mounting bolts for the WBT*

B *Mounting bracket for the power supply*

C *Holes for fastening and securing the cables*

D *Mounting bolts for the drawer assembly*

E *Mounting bolts for the drawer*

Procedure

1 Decide where in the cabinet you wish to mount the drawers.

2 Mount each drawer using six bolts on each side (**D**).

3 Pull out the drawer.

4 Remove the power supply bracket (**B**).

5 Place the power supply on the drawer, and mount the bracket (**B**) to secure it.

6 Mount the WBT using the bolts provided (**A**).

Further requirements

Connect the cables.

Designing, manufacturing and mounting the steel conduit

A steel conduit is used to protect the transducer cable. The conduit serves two purposes. It will protect the cable, and shield it from electric noise. Depending on how the steel conduit is terminated over the transducer, it may also secure the watertight integrity of the vessel.

Prerequisites

To design, manufacture and mount the steel conduit, the following prerequisites must be met:

- All relevant vessel and transducer drawings must be available.
- All relevant work instructions, procedures and standards must be available.
- The physical location of the transducer has been determined.
- The installation method has been determined.
- The cable gland has been installed.
- All relevant personnel (naval architects, designers, skilled shipyard workers) and tools must be available.

A *Service access (optional)*

B *To transceiver*

C *Steel conduit*

D *Bushing, penetrates the hull plating*

E *Washer*

F *Rubber gasket*

G *Packing nut*

H *Cable service loop over the transducer*

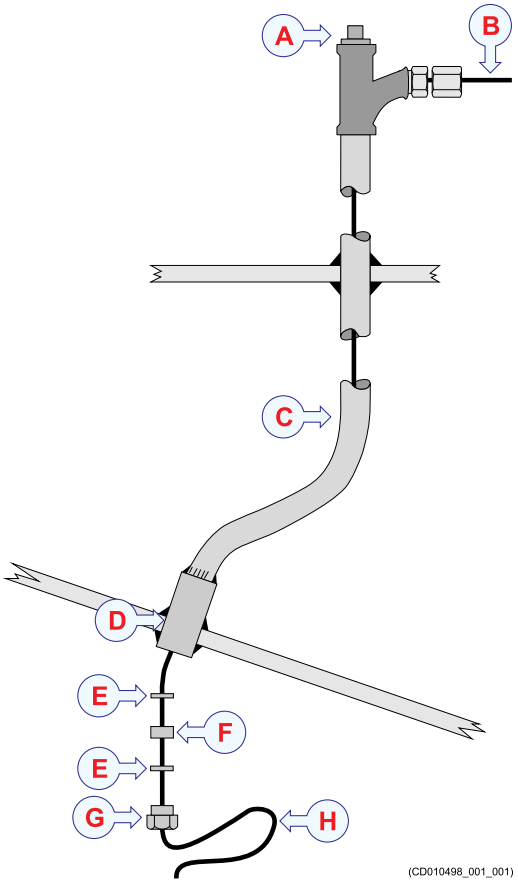

Context

The installation shipyard must provide all necessary design and installation drawings, as well as the relevant work standards and mounting procedures. If required, all documents provided by the shipyard for the physical installation of the EA640 must be approved by the vessel's national registry and corresponding maritime authority and/or classification society. Such approval must be obtained before the installation can begin. The shipowner and shipyard doing the installation are responsible for obtaining and paying for such approval.

Important

Finalize the steel conduit installation before you pull the transducer cable through it. Make sure that there are no spatter, sharp edges or protruding objects that can damage the transducer cables. If a cable is damaged, and penetrated by water, the transducer may be damaged beyond repair.

Procedure

1. Based on the vessel drawings, the physical properties of the decks and bulkheads, and the physical locations of the WBT and the transducer, design the steel conduit.

   The steel conduit must preferably be straight. Start the conduit immediately above the transducer, and terminate it well above the water line. If you must introduce bends on the steel conduit, take the minimum cable bending radius into consideration.

2. Manufacture the steel conduit according to the relevant production standards.

3. Mount the steel conduit.

Secure the steel conduit to decks and/or bulkheads with welds. Observe relevant requirements and guidelines from the classification society, and make sure that the conduit is properly supported, strong and watertight.

Note

The quality of the welding is critical to the safety of the vessel. Welding must only be done by a certified welder.

4 If relevant, allow the maritime authority and/or classification society to inspect and approve the design and the installation of the steel conduit.

Installing the transducer(s)

The installation of the transducer (or transducers) is a key task for successful use of the EA640 Hydrographic single beam echo sounder. Not only will you need to penetrate the vessel's hull, you must also to select a physical location for maximum performance and minimum acoustic and electric noise.

Prerequisites

To get a full overview of the installation, you need all relevant vessel drawings. You also need the drawings provided for each transducer.

Context

Necessary information for the installation of each transducer can be found in the end-user documentation provided with the transducer.

Procedure

1 Determine the physical location of the transducer.

The decision must be based on:

- The vessel drawings
- The shape and properties of the hull

Make sure that all possible considerations are made to reduce noise.

2 Based on the shape of the transducer housing, and the mounting devices available, determine the installation method.

3 Design, manufacture and mount the necessary fairing, installation blister, keel box and/or tank that is required to mount the transducer.

4 Design, manufacture and mount the steel conduit for the transducer cable.

5 Unpack the transducer from its transport crate.

6 Position the transducer under the mounting location.

7 Pull the transducer cable up through the steel conduit.

8 Tighten the packing nut on the cable gland properly to avoid leaks.

9 Mount the transducer.

10 Seal the top of the steel conduit to prevent water leaks.

11 Connect the transducer cable to the WBT.

12 If your vessel will operate in waters with a lot of marine growth, consider applying a thin layer of anti-fouling paint to the transducer face.

Installing the transducer on a blister or drop keel

When all the preparations have been made, observe this procedure for the mounting of the transducer If required, additional and more detailed procedures must be provided by the installation ship yard.

Prerequisites

- The physical location of the transducer has been determined.
- The steel conduits are installed.
- A suitable fairing is designed and mounted.

Note

Whenever relevant, all drawings as well as the physical installation of each device must be approved by the vessel's national registry and corresponding maritime authority and/or classification society.

The following special tools are required for this installation:

- Torque wrench for the mounting bolts
- Loctite 270 (permanent high-strength threadlocker)

Context

This installation arrangement assumes that you can access the inside of the blister or drop keel to mount the nuts. If this is not the case, the transducer must be mounted with threaded steel rods welded to the bottom of the blister.

A Bolt with suitable diameter and length

B Nut

C Washer

D Transducer cable

E Blister bottom plate

F Fill with suitable filling compound (putty) to reduce flow noise

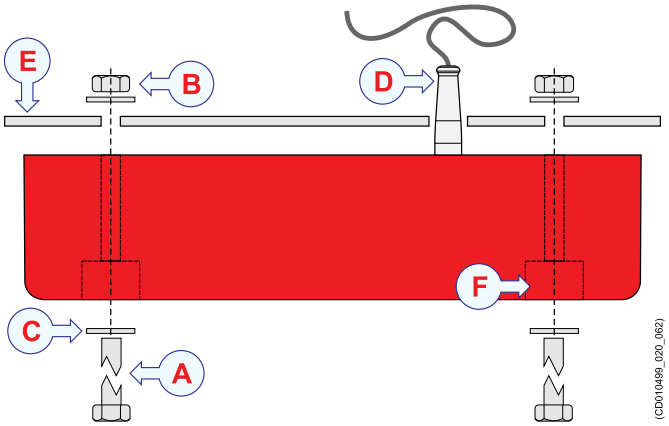

Procedure

1 Lift the transducer up into is location, and align the holes on the transducer with the holes in the blister or drop keel.

Observe the direction of the transducer. The "forward" marking must point towards the bow of the vessel!

2 Insert the two bolts through the transducer and the blister or drop keel bottom plate.

3 Fasten the two nuts on the inside of the blister or drop keel.

Use Loctite 290 to secure the bolts.

4 Fill the two bolt holes in the transducer with a suitable filling compound (putty), and smooth out the surface of the transducer face.

Any obstructions, cracks, dents or unevenness on the transducer face may cause flow noise.

5 When the transducer has been fastened, inspect the plating around the transducer face.

Important

Make sure that the surface of the transducer face, as well as the plating and putty around the transducer is as even and smooth as possible. Obstructions on these surfaces will create problems with turbulent flow, and may cause noise.

6 If required, allow the relevant maritime authority and/or classification society to inspect and approve the transducer installation.

Installing the transducer on a steel hull

When all the preparations have been made, observe this procedure for the mounting of the transducer If required, additional and more detailed procedures must be provided by the installation ship yard.

Prerequisites

- The physical location of the transducer has been determined.
- The steel conduits are installed.
- A suitable fairing is designed and mounted.

Note

Whenever relevant, all drawings as well as the physical installation of each device must be approved by the vessel's national registry and corresponding maritime authority and/or classification society.

The following special tools are required for this installation:

- Torque wrench for the mounting bolts
- Loctite 270 (permanent high-strength threadlocker)

Context

It is very important that the fairing designed for the installation supports the full length of the transducer body. Incomplete support will put the transducer.at risk in heavy seas.

The force of the water when the hull falls down may push the transducer up, and may cause damage both to the transducer and to its mounting.

Note

Kongsberg Maritime AS takes no responsibility for any damages to the transducer, the cable or the mounting arrangement, caused by slamming.

1 Nut

2 Threaded rod with suitable diameter and length, welded to the bottom of the fairing

3 Washer

4 Transducer cable

5 Hull

6 Fill with suitable filling compound (putty) to reduce flow noise

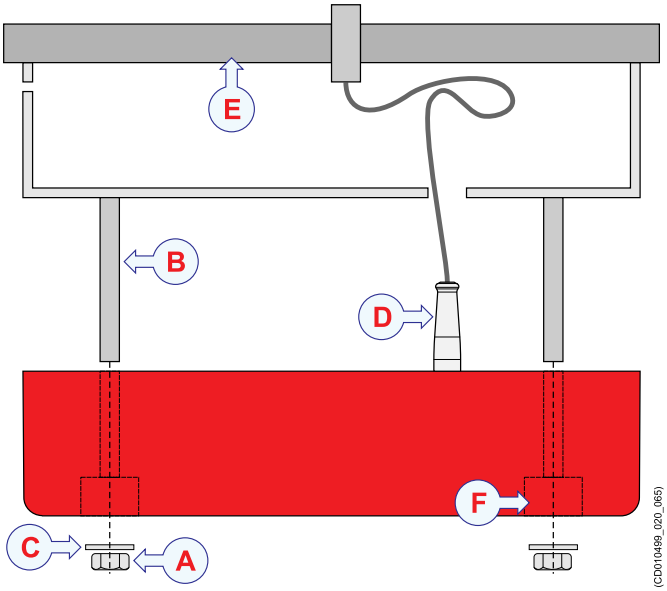

Procedure

1 Lift the transducer up into is location, and align the holes on the transducer with the threaded rods welded to the fairing.

Observe the direction of the transducer. The "forward" marking must point towards the bow of the vessel!

2 Push the transducer in place.

3 Fasten the two nuts on the end of each threaded rod.

Use Loctite 290 to secure the bolts.

4 Fill the two bolt holes in the transducer with a suitable filling compound (putty), and smooth out the surface of the transducer face.

Any obstructions, cracks, dents or unevenness on the transducer face may cause flow noise.

5 When the transducer has been fastened, inspect the plating around the transducer face.

Important

Make sure that the surface of the transducer face, as well as the plating and putty around the transducer is as even and smooth as possible. Obstructions on these surfaces will create problems with turbulent flow, and may cause noise.

6 If required, allow the relevant maritime authority and/or classification society to inspect and approve the transducer installation.

Cable layout and interconnections

Topics

Cable plan

The cables are part of the delivery with the main units.

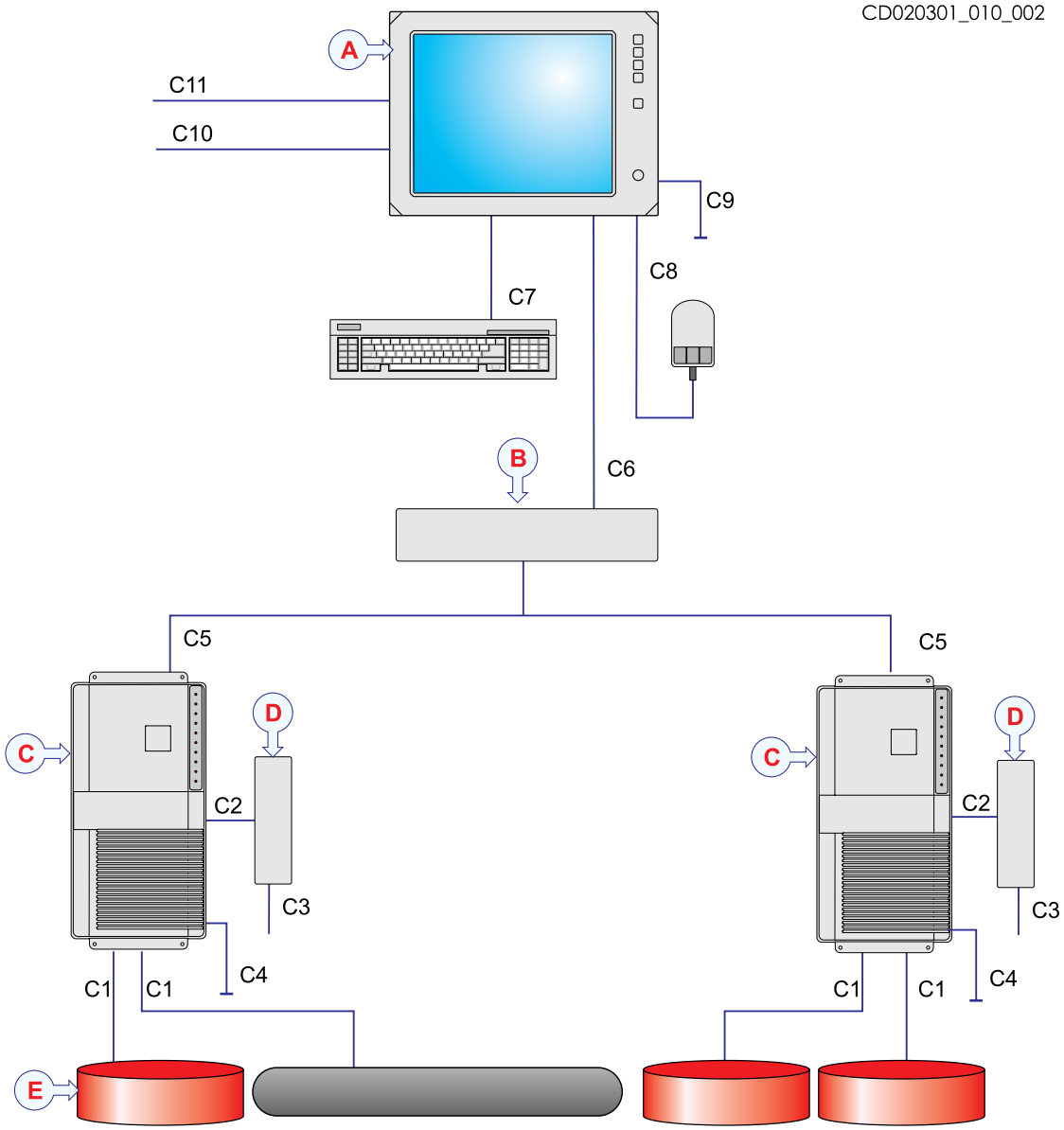

A Operator Station

B Ethernet switch

C WBT

D Power supply

E Transducer

An Ethernet switch is required if more than one WBT is used.

A junction box is required if the transducer cable is longer than provided.

List of cables

A set of cables is required to connect the EA640 units to each other, and to the relevant power source(s).

Cable	Type	From/To	Minimum requirements
C1	Transducer cable	From WBT to transducer	*
C2	DC power cable	From Power supply to WBT	**
C3	AC power cable	From Power supply to AC power outlet	**
C4	Ground cable	From WBT to vessel ground	1 x 6 mm^2
C5	Ethernet cable	From WBT to Ethernet switch	CAT5–E STP
C6	Ethernet cable	From Operator Station to Ethernet switch	CAT5–E STP
C7	Computer cable	From Operator Station to keyboard	**
C8	Computer cable	From Operator Station to mouse (or another similar device)	**
C9	Ground cable	From Operator Station to vessel ground	1 x 6 mm^2
C10	AC power cable	From Operator Station to AC power outlet	**

Comments

1 The transducer cable is provided with the transducer. If you need to splice the transducer cable to make it longer, observe the information in the end user documentation for the relevant transducer.

2 The cable is supplied with the EA640 delivery.

Identifying EA640 cables on a project cable drawing

The EA640 is often a part of a project delivery. For such deliveries, specific project cable drawings are established to show all the main cables, and how the various products are connected. In such project cable drawings, the EA640 cables may be identified as **EA640/Cx**.

Installing the EA640 cables

Topics

Connecting one or more transducers to the WBT

Depending on your operational requirements for the EA640, one or more transducers must be connected to the WBT.

Prerequisites

It is strongly recommended to lay a steel conduit from the cable gland above the transducer to the EA640 transceiver, and to pull the transducer cable through this conduit.

There are several reasons for this.

- It will make it easier at a later stage to replace the transducer.
- It will protect the cables.
- Noise and interference from other electrical equipment is greatly reduced.
- The risk of flooding is greatly reduced when the steel conduit is terminated above the water line.

With a steel conduit the installation will satisfy the European Union regulations for electromagnetic compatibility (EMC) interference. Without a steel conduit, there is a risk of reduced EA640 performance.

Context

The WBT used by the Kongsberg EA640 can be set up to work with maximum four -4- operational frequencies. This means that you can use four single frequency/single beam transducers or two dual frequency transducers.

The transducer is connected to a terminal block under a panel plate on the rear of the WBT. The connectors are a part of the WBT delivery.

WBT – Standard

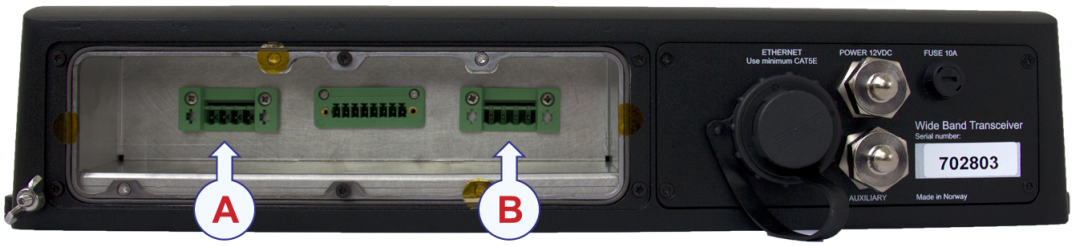

A **P1**: Transducer: Channel 1 - 2

B **P2**: Transducer: Channel 3 - 4

WBT – High power

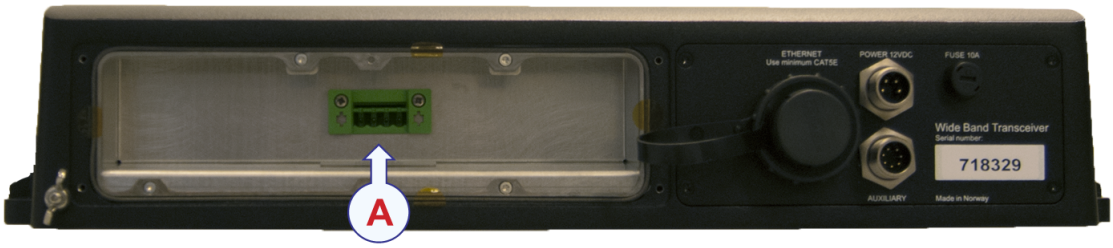

A **P1**: Transducer: Channel 1 - 2

Procedure

1 Pull the transducer cable through the steel conduit.

2 Make sure that an ample length of the transducer cable is available for maintenance and replacement.

3 Cut the transducer cable.

4 Find the panel for the rear side of the WBT, the cable glands, the blind plugs and the nuts.

5 Make sure you use the correct size cable gland according to the cable size. The cable glands are included in the delivery.

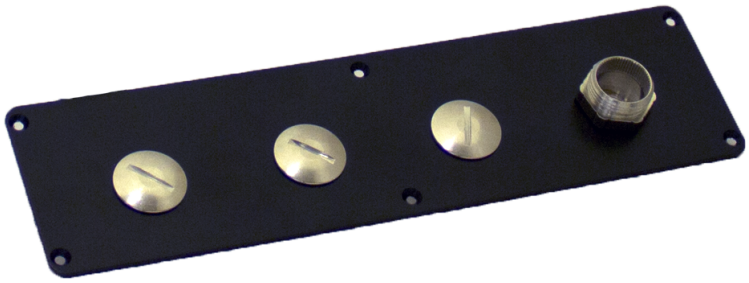

6 Use a blind plug to cover the points not in use.

7 Pull the transducer cable through the cable glands.

8 Remove the insulation on the shield in the transducer cable.

9 Cut the shield, to just cover the seal.

10 Remove the insulation on the wires in the transducer cable.

11 Add an end sleeve to the wires.

12 Fit the cable gland.

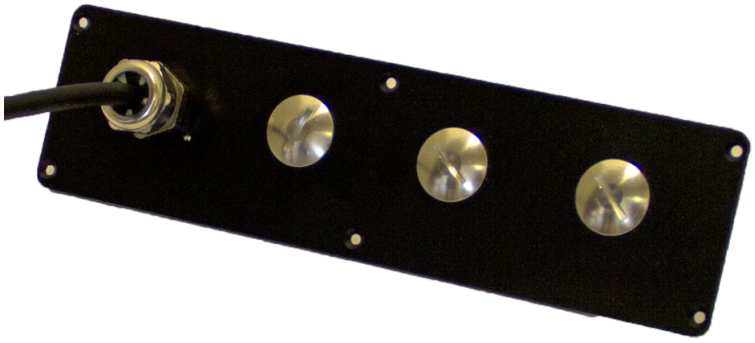

13 Connect the conductors in the transducer cable to the correct pins in the plugs, using the pin-out and the ship's cable plan. Check the license information to see which transducer to install where.

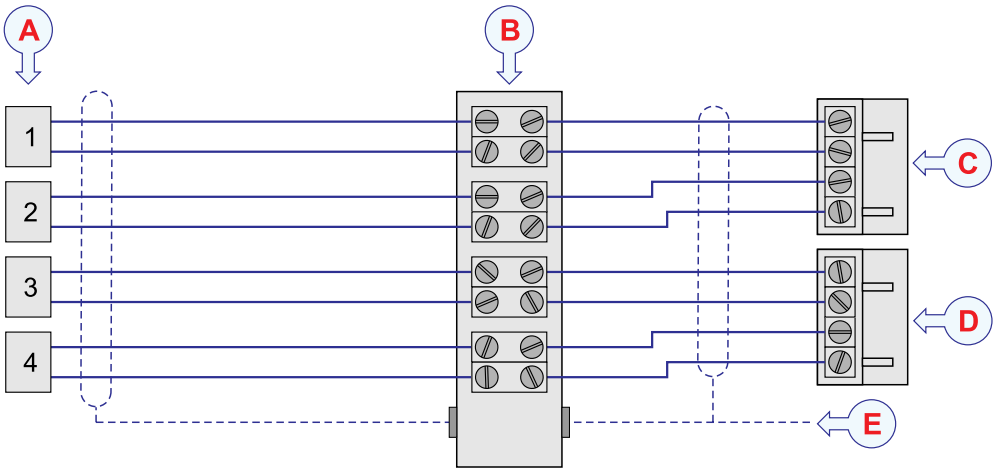

14 Connect the plugs to P1 and P2.

15 Make sure the conductive gasket is still attached to the WBT.

16 Fasten the panel.

Connecting power and ground to the WBT

The EA640 WBT is powered by a dedicated power supply connected to the AC mains, or from a suitable battery for DC operation. The unit must be properly grounded.

Context

The power for the WBT is provided by a separate power supply. It is normally connected to an uninterruptible power supply, and will automatically detect the mains voltage (230 or 115 VAC) when connected. The output from the power supply is connected to the +12 VDC input socket on the WBT. The AC and DC power cables are provided with the power supply.

Procedure

1 Connect the DC cable from the power supply to the +12 Vdc socket.

   If you wish to operate your WBT from a DC supply, you can use any suitable battery providing +12 to +15 Vdc.

2 Connect the AC mains plug on the power supply to the bulkhead power outlet (or an uninterrupted power supply).

3 Connect the grounding cable from the nearest grounding point to the dedicated terminal on the WBT.

Connecting the WBT and the Operator Station

The Operator Station is connected to the WBT using a high speed Ethernet cable.

Context

Note

It is very important that a high quality Ethernet cable is used. You must use CAT-5E STP (Shielded Twisted Pair) quality or better. Using cables with lower bandwidth capacity will reduce the EA640 performance.

Procedure:

- Connect the Ethernet cable from the Operator Station to the Ethernet socket on the WBT.
- If you have a system with more than one WBT you need a switch.

  Tip

  We recommend having the switch in the sonar room, close to the WBTs. This gives you only one Ethernet cable from the sonar room to the Operator Station.

Connecting a synchronization cable to the Operator Station using an RS-232 serial interfaces

An RS-232 serial line connection using the Request To Send (RTS) and Clear To Send (CTS) signals is common way to connect the EA640 to external devices for synchronisation purposes. The cable is connected to the serial line adapter on Operator Station.

Context

Note that this cable does not support all the signals in the standard RS-232 specification.

Unless otherwise specified, these cables must be provided by the installation shipyard.

Important

Observe that long runs of unshielded cable will pick up noise easily. This is because the RS-232 signals are not balanced.

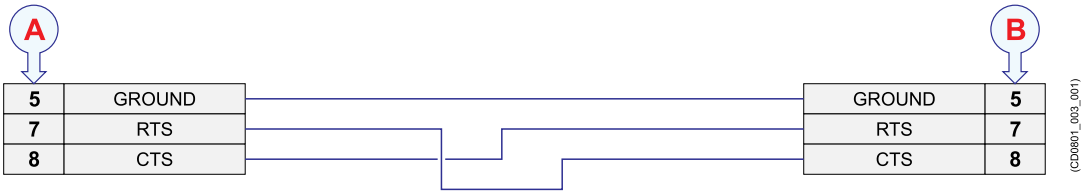

A Local connection

B Connection on remote device

C Female 9-pin D-connector

D Male 9-pin D-connector

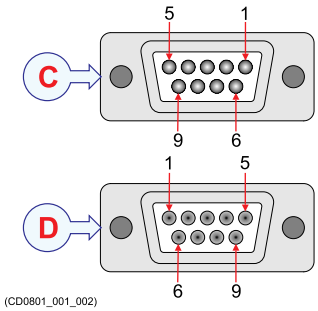

Procedure

1 Locate the serial connector on the rear side of the Operator Station.

Note

You must use an RS-232 interface for this purpose.

2 Connect the serial cable from the Operator Station to the peripheral device.

3 On the peripheral device, wire as described in the relevant documentation.

Further requirements

All serial interfaces must be defined in the EA640 software prior to use.

Cable drawings and specifications

Topics

Transducer

For an EA640 system the WBT can handle up to four channels.

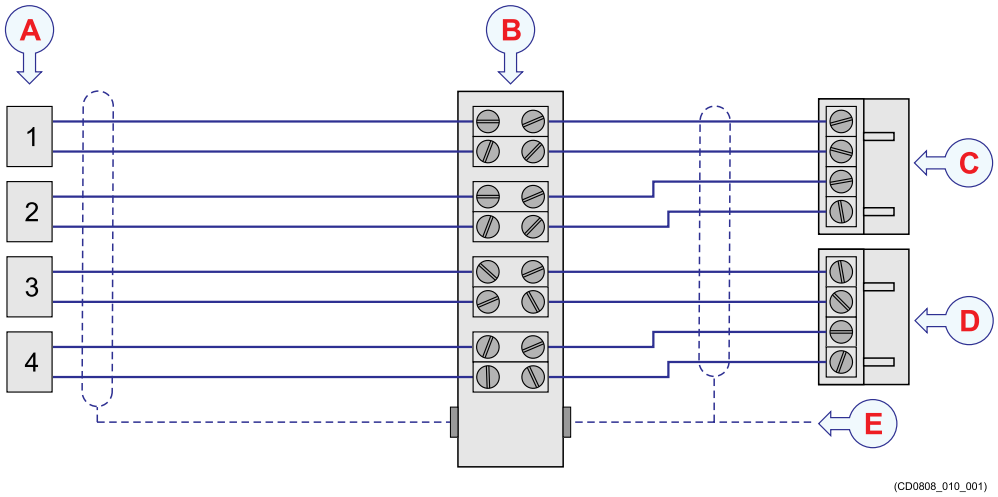

A *Transducers*

B *Optional junction box*

C *WBT transceiver, connector P1*

D *WBT transceiver, connector P2*

E *The cable screen must be terminated in the cable gland*

If you need to splice the transducer cable, we strongly recommend the use of a metal junction box with proper cable glands. The cable screen must be connected to the cable glands. The cable screen and the junction box chassis must not be connected to vessel ground. Avoid ground loops. You must use the same type of cable as the original transducer cable, contact Kongsberg Maritime for advice.

Auxiliary connector for synchronization

The WBT is fitted with a dedicated socket for auxiliary interfaces.

The AUXILIARY socket on the WBT can be used to interface an external synchronization system.

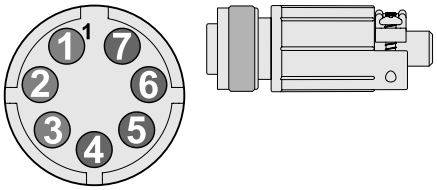

The socket is made to fit a Conxall 7-pin **Mini-Con-X**® shielded connector. The connections are made on pins 2, 3 and 5. The connector can be ordered from the manufacturer, or purchased from Kongsberg Maritime using order number **387563**.

- **Manufacturer**: Switchcraft Conxall
- **Manufacturer's website**: http://www.conxall.com

Pin number	**1**	**2**	**3**	**4**
Purpose	Future use	Synchronization Output	Synchronization Input	Future use
Pin number	**5**	**6**	**7**	
Purpose	Digital ground	Not used	Not used	

Minimum cable requirements

- **Conductors**: 4 x 0.5 mm^2
- **Screen**: Overall braided
- **Voltage**: 60 V
- **Maximum outer diameter**: Defined by the plugs and/or the cable gland

If you need to install a very long cable, increase the cross section.

RS-232 used as synchronization trigger (input or output)

An RS-232 serial line connection using the Request To Send (RTS) and Clear To Send (CTS) signals is common way to connect the EA640 to external devices for synchronization purposes.

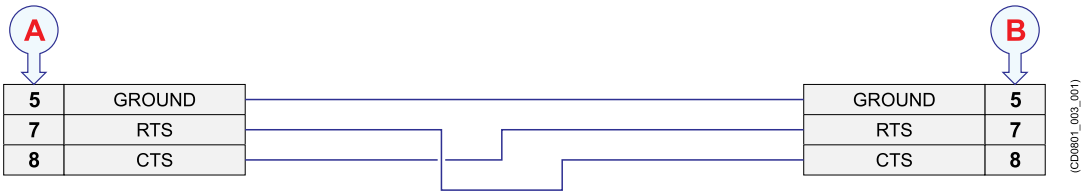

A *Local connection*

B *Connection on remote device*

C *Female 9-pin D-connector*

D *Male 9-pin D-connector*

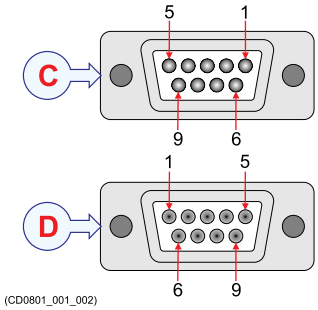

This cable takes the control signals on a RS-232 serial line, and uses these as an external trigger. It provides interface with any peripheral unit that requires or controls transmit/receive synchronization. Note that this cable does not support all the signals in the standard RS-232 specification.

Note

This synchronization method can only be used with RS-232 communication. You can only connect two systems together.

Unless otherwise specified, this cable must be provided by the installation shipyard.

Minimum cable requirements

- **Conductors**: 2 x 4 x 0.5 mm^2
- **Screen**: Overall braided
- **Voltage**: 60 V
- **Maximum outer diameter**: Defined by the plugs and/or the cable gland

If you need to install a very long cable, increase the cross section.

Drawing file

Topics

388697 WBT outline dimensions

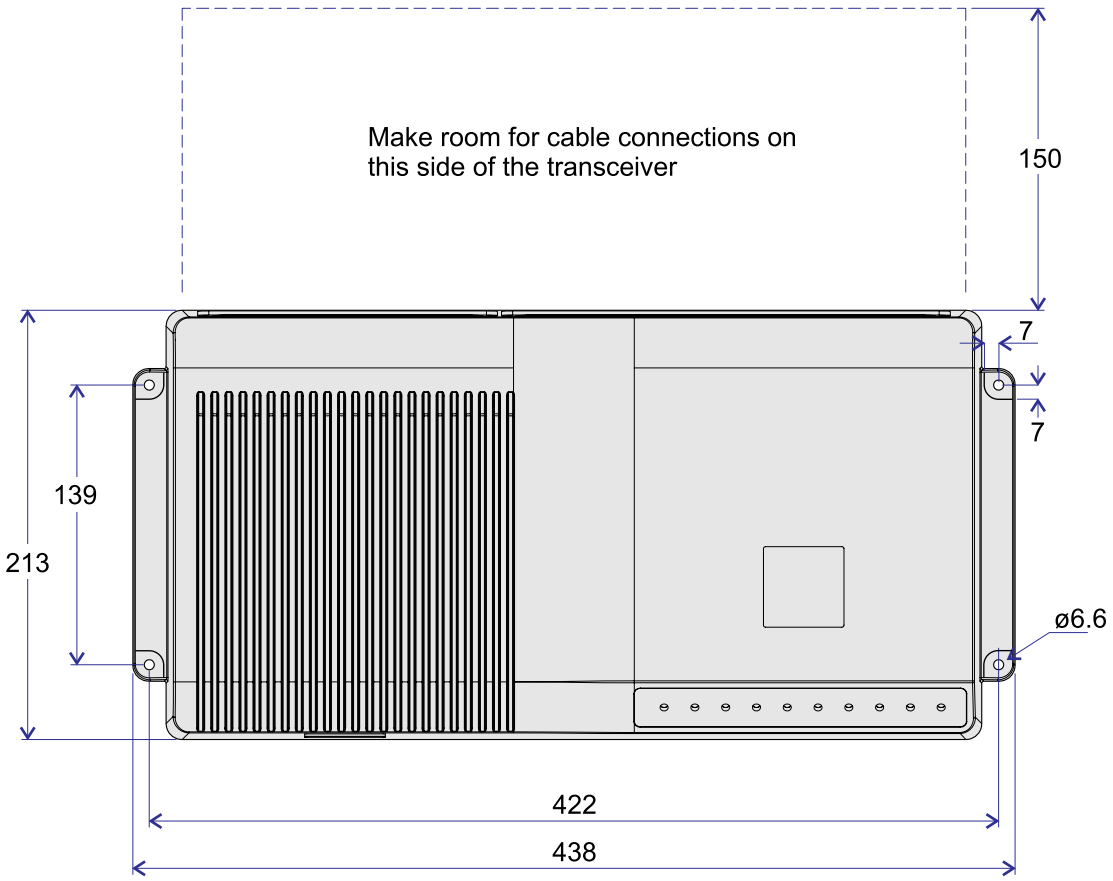

All measurements in mm.
The drawing is not in scale.

[388697] Rev.B
CD12_388697_001_001

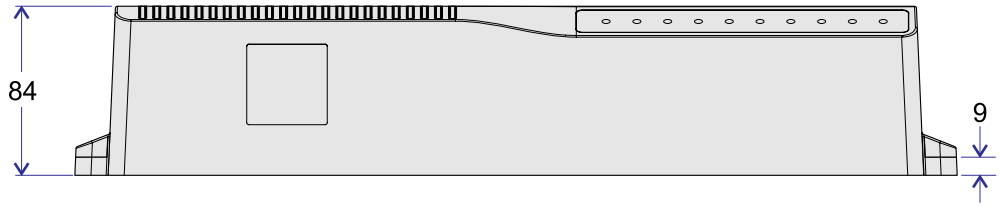

All measurements in mm.
The drawing is not in scale.

[388697] Rev.B
CD12_388697_001_002

400930 WBT Cabinet outline dimensions

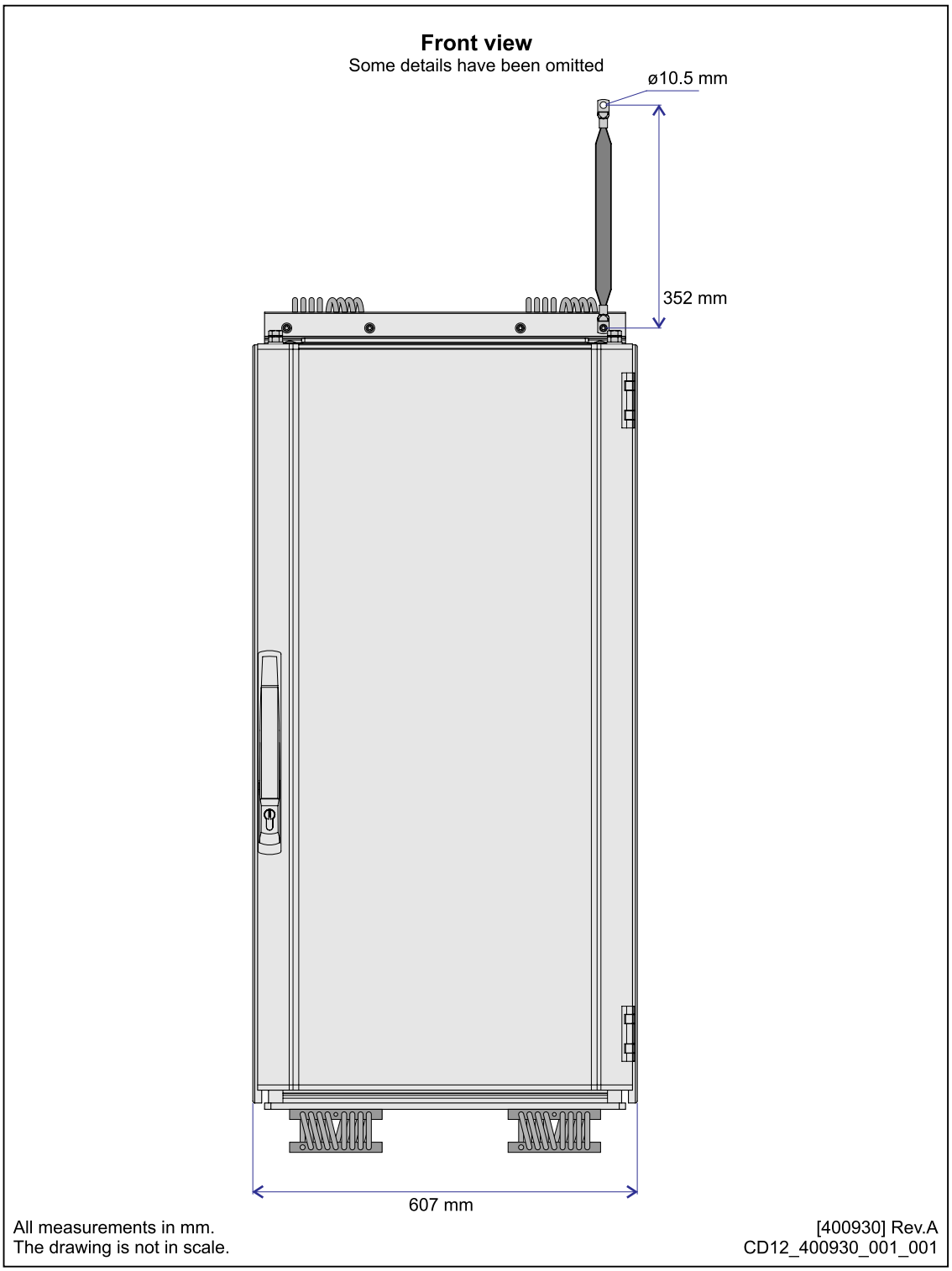

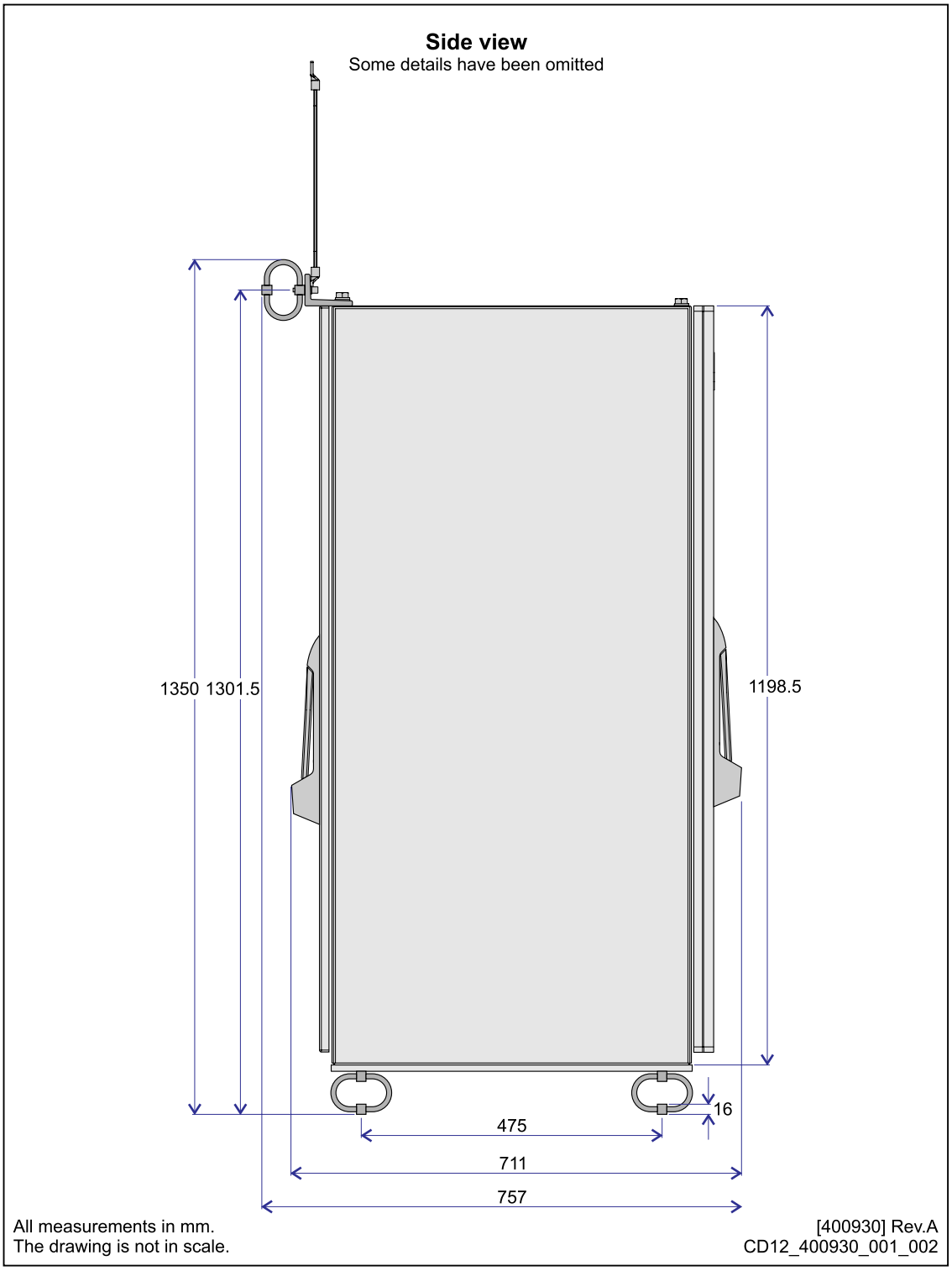
Side view
Some details have been omitted
1350
1301.5
1198.5
16
475
711
757
All measurements in mm.
The drawing is not in scale.
[400930] Rev.A
CD12_400930_001_002

Top view
Some details have been omitted

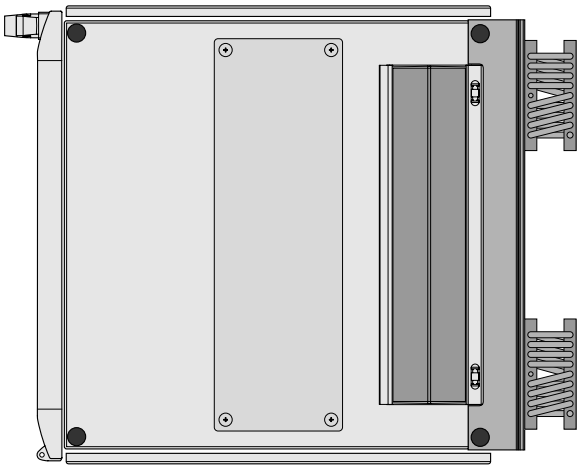

Front
Provide minimum
1000 mm service area

Rear

All measurements in mm.
The drawing is not in scale.

[400930] Rev.A
CD12_400930_001_003

Bottom view

Some details have been omitted

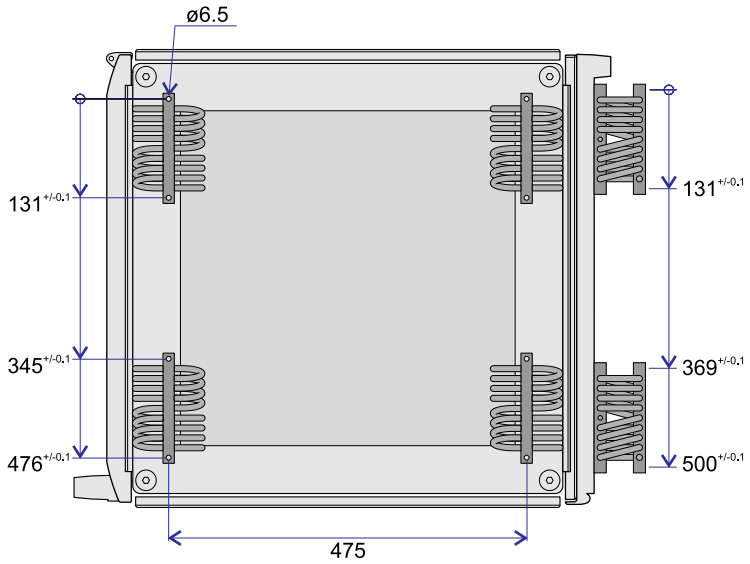

All measurements in mm.
The drawing is not in scale.

[400930] Rev.A
CD12_400930_001_004

Technical specifications

Topics

Performance specifications

These performance specifications summarize the main functional and operational characteristics of the EA640 Hydrographic single beam echo sounder.

Pulse lengths and maximum resolution

- **500 kHz**: CW 32 - 512 µs, FM, Resolution: 0.3 cm
- **200 kHz**: CW 64 - 1024 µs, Resolution: 0.6 cm
- **38 kHz**: CW 256 - 4096 µs, Resolution: 2.4 cm
- **18 kHz**: CW 512 - 8192 µs, Resolution: 4.9 cm
- **12 kHz**: CW: 1 - 16 ms, Resolution: 9.8 cm

Range

- **Operational range**: 1 to 12,500 m
- **Pulse bandwidth**: 10 to 500 kHz

Ping rate

- Maximum40 per second

Sound Speed

- Manual (1400 to 1700 m/s)
- Calculated from temperature and salinity
- Calculated from temperature sensor and salinity
- Read from sound speed probe

Interfaces

- WBT: Ethernet communication
- **Optional interfaces**:
  - Ethernet to ships' network
  - Sensors: GPS, gyro, motion, speed log, temperature, remote control, annotation, water level, drop keel, external depth and sound speed
- **Export file formats**: See *Interface specifications*
- **Depth output**: See *Interface specifications*
- **Remote control**: Remote start/stop logging available on serial or network

User interface

- **Operating system**: Microsoft® Windows® 10
- **Main control**: Mouse or touch on a comprehensive menu system

- **Menu languages**: English, French, Icelandic, Norwegian, Spanish, German

Interface specifications

The EA640 will interface with peripheral systems and sensors using standard and/or proprietary datagram formats.

Supported datagram formats for position information

The EA640 supports the following datagram formats for position information.

- **NMEA GLL**

  The NMEA GLL datagram transfers the latitude and longitude of vessel position, the time of the position fix and the current status from a global positioning system (GPS).

- **NMEA GGA**

  The NMEA GGA datagram transfers the time, position and fix related data from a global positioning system (GPS).

- **NMEA GGK**

  The NMEA GGK datagram is used to decode the PTNL, Time, Position, Type and DOP (Dilution of Precision), string of the NMEA 0183 output.

- **NMEA RMC**

  The NMEA RMC datagram transfers the time, date, position, course and speed data from a global navigation satellite system (GNSS) receiver.

- **NMEA VTG**

  The NMEA VTG datagram contains the actual course and speed relative to the ground.

- **NMEA ZDA**

  The NMEA ZDA datagram contains the universal time code (UTC), day, month, year and local time zone.

Supported datagram formats for speed log information

The EA640 supports the following datagram formats for speed information.

- **NMEA VTG**

  The NMEA VTG datagram contains the actual course and speed relative to the ground.

Supported datagram formats for heading and gyro information

The EA640 supports the following datagram formats for vessel heading and/or gyro information.

- **NMEA HDT**

  The NMEA HDT datagram provides the true vessel heading. The information is normally provided by a course gyro.

- **NMEA HDM**

  The NMEA HDM datagram provides vessel heading in degrees magnetic. The datagram format is no longer recommended for use in new designs. It is often replaced by the NMEA HDG telegram.

- **NMEA HDG**

  The NMEA HDG datagram provides heading from a magnetic sensor. If this reading is corrected for deviation it produces the magnetic heading. If it is offset by variation, it provides the true heading.

Supported datagram formats for motion information

The EA640 supports the following datagram formats from a motion sensor.

- **Kongsberg EM Attitude 3000**

  The EM Attitude 3000 is a proprietary datagram format created by Kongsberg Maritime for use with digital motion sensors.

- **Simrad TSS1**

  Simrad Sounder/TSS1 is a proprietary datagram format created by Kongsberg Maritime for heave, roll and pitch compensation. When you select this protocol, the number of sensor variables is fixed, and there is no token associated with it.

Supported datagram formats for annotation data

The EA640 supports the following datagram format for annotations.

- **Simrad ATS datagram format**

  Simrad ATS is a proprietary datagram format created by Kongsberg Maritime. It allows you to import annotations from external devices.

Supported datagram formats for depth information

The EA640 supports the following datagram formats for depth output.

- **NMEA DBS**

  The NMEA DBS datagram provides the current depth from the surface. The datagram is no longer recommended for use in new designs. It is frequently replaced by the NMEA DPT datagram.

- **NMEA DBT**

  The NMEA DBT datagram provides the current depth under the transducer. In new designs, this datagram is frequently used to replace the DBK and DBS datagrams.

- **NMEA DPT**

  The NMEA DPT datagram provides the water depth relative to the transducer, and the offset of the measuring transducer.

- **Simrad depth**

Simrad depth is a proprietary datagram format created by Kongsberg. The draft, frequency, sound velocity profile and transducer depth may be included.

- **Atlas Depth**

  Atlas Depth is a proprietary datagram format created by Atlas Elektronik (http://www.atlas-elektronik.com) to provide the current depth from two channels.

- Hymas

  Hymas is a third party proprietary datagram format.

Processed data formats

The following processed data output formats are available.

- **XTF**

  XTF means *eXtended Triton Format*. This is a file format for recording various types of hydrographic survey data. The source systems include sidescan sonar, shallow seismic and multibeam bathymetry, as well as associated position and altitude information.

- **SEGY**

  The SEGY (sometimes abbreviated "SEG-Y") file format is one of several standards developed by the *Society of Exploration Geophysicists (SEG)* for storing geophysical data. It is an open standard, and is controlled by the SEG Technical Standards Committee. For more information, see http://community.seg.org.

- **XYZ**

  This is processed and interpolated "xyz" data in ASCII format. Note that a navigation input must be available.

- **Echogram**

  This is the proprietary **EK500** datagram format. The datagrams consists of user defined excerpts of the processed sample data (pixel data), ie the backscatter value of the targets. The echograms are stored as time tagged datagrams in separate files.

- **SILAS**

  This is a proprietary format that was created for the SILAS software.

- **Out**

  Kongsberg Out file format. This is a proprietary format.

- **TIFF**

  TIFF file format. This is a picture format.

Weight and outline dimensions

These weights and outline dimension characteristics summarize the physical properties of the EA640 Hydrographic single beam echo sounder.

Note

For more detailed information about the physical dimensions, see the Drawing file.

Operator Station

- **Make and model**: Hatteland Display JH 19T14 MMC
- **Outline dimensions**
  - **Depth**: 82 mm
  - **Width**: 483 mm
  - **Height**: 444 mm
- **Weight**: 11 kg (Approximately)

WBT

- **Make and model**: Kongsberg WBT
- **Outline dimensions**
  - **Depth**: 213 mm
  - **Width**: 438 mm
  - **Height**: 84 mm
- **Weight**: 5 kg (Approximately)

Power requirements

These power characteristics summarize the supply power requirements for the EA640 Hydrographic single beam echo sounder.

Operator Station

- **Make and model**: Hatteland Display JH 19T14 MMC
- **Voltage requirement**: 115/230 VAC / 50/60 Hz
- **Power consumption**: 100 W maximum

The technical specifications are those valid for the computer that provided by Kongsberg Maritime as a part of the EA640 delivery. For specifications related to a locally purchased computer, refer to the documentation provided with the unit.

WBT

- **Make and model**: Kongsberg WBT
- **Voltage requirement: 12 – 15 VDC, 5A**

  A suitable power supply is provided with the delivery.
- **Power supply:**
  - **Voltage requirement**115/230 VAC, 47 to 63 Hz, single phase, nominal
  - **Maximum voltage deviation**: 15%
  - **Maximum transient**: 20% of nominal voltage, recovery time 3 s
  - **Power consumption**: 100 VA (Approximately)

Environmental requirements

These environmental specifications summarize the temperature and humidity requirements for the EA640 Hydrographic single beam echo sounder.

Operator Station

- **Make and model**: Hatteland Display JH 19T14 MMC
- **Operational temperature**: -15 to 55 °C
- **Storage temperature**: -20 to 60 °C
- **Relative humidity**:95% maximum
- **Degree of protection**: IP66 front, IP20 rear

The technical specifications are those valid for the computer that may be ordered from Kongsberg Maritime as a part of the EA640 delivery. For specifications related to a locally purchased computer, refer to the documentation provided with the unit.

WBT

- **Make and model**: Kongsberg WBT
- **Operational temperature**: 0 to +50 °C
- **Storage temperature**: -40 to 70 °C
- **Relative humidity**: 5 to 95% relative, non-condensing

Equipment handling

Topics

Transporting Kongsberg Maritime equipment

Unless otherwise stated in the accompanying documentation, electronic, electromechanical and mechanical units supplied by Kongsberg Maritime can be only transported using methods approved for delicate and fragile equipment.

Prerequisites

Transportation methods approved for delicate equipment includes transportation by road, rail, air or sea.

Context

The units are to be transported in accordance with general or specific instructions for the appropriate unit(s), using pallets, transport cases, wooden boxes, or carton boxes as appropriate.

Observe the packing instructions.

Note

Special local restrictions concerning air transportation may be applied to units containing certain types of batteries. These units must be checked properly, and the regulations must be investigated by the packer/shipper before the unit is dispatched.

Procedure

1 Ensure that all local transportation is done according to the same specifications as for the initial delivery.

2 Make sure that the box containing the unit is kept dry at all times, and sheltered from the weather.

   It must not be subjected to shocks, excessive vibration or other rough handling. The box will normally be marked with text or symbols indicating which way it is to be placed. Follow the instructions provided, and make sure that the box is always placed with its “top” facing upwards.

3 Make sure that the box is not used for any purpose for which it was not intended (step, table, etc.).

   In the absence of other information, no other boxes must be stacked on top of it.

4 Handle all boxes and units with care.

   Note

   Due to the nature of Kongsberg Maritime’s products, and the extensive use of delicate electronic parts, all units and boxes must be regarded and handled as fragile equipment.

Lifting units and transportation boxes

Some of the boxes used to hold equipment units may be heavy. Use caution when lifting.

Prerequisites

Units and boxes may be heavy. Make sure that you have the necessary equipment required for lifting heavy items. Persons using the lifting equipment must be skilled and have the relevant certificate(s).

Context

A heavy box will normally be marked with its weight. The weights of other boxes in the shipment will normally be entered on the packing list(s).

Heavy units may be equipped with dedicated lifting lugs for transportation by crane within the workshop or installation area.

Note

Observe the local rules and regulations related to the use of lifting equipment.

Procedure

1. Check the weight of the box or unit before you attempt to lift it.
2. Make sure that you have the relevant lifting apparatus required, and that this equipment is approved and certified for the load.
3. If you need to use a crane:
   - a Check the applicable weight certificate for the crane.
   - b Check the security of the lifting lugs.
   - c If the unit to be lifted is provided with dedicated lifting lugs, make sure that all available lugs are used.
   - d Make sure that the unit remains under full control during the lifting operation.

     This is important to avoid damage to the unit, equipment or personnel.
4. If you need to use a forklift truck:
   - a Check the applicable weight certificate for the truck.
   - b Check the limitations for lifting height and angles.
   - c Pay special attention to the position of the unit's centre of gravity.
   - d Make sure that the unit is properly secured to the truck during the lifting and transportation operations.
5. Handle all units and boxes with care.

Note

Due to the nature of Kongsberg Maritime's products, and the extensive use of delicate electronic parts, all units and boxes must be regarded and handled as fragile equipment.

Inspection of units and transportation boxes after arrival

A visual inspection must be done immediately after the box(es) have arrived at their destination.

Prerequisites

If you suspect that the equipment has been damaged during the transport, request that a representative of the carrier is present during the inspection.

Procedure

1. Check all boxes (wooden or cardboard boxes, plastic bags and/or pallets) for physical damage.

   Look for signs of dropping, immersion in water or other mishandling.

2. If external damage is detected, open the box to check its contents.

   Request that a representative of the carrier to be present while the box is opened, so any transportation damage can be identified and documented.

3. If a unit has been damaged, prepare an inspection report stating the condition of the unit and actions taken.

   Describe the damage, and collect photographic evidence if possible. Return the inspection report to Kongsberg Maritime as soon as possible.

4. If units are not damaged, check the humidity absorbing material.

   If required, dry or replace the bags, then re-pack the unit(s) according to the packing instructions.

Specifications for storage prior to installation or use

When a system, a unit or a spare part has been delivered to the customer, it may be subject to long time storage prior to installation and use.

General specifications

During this storage period, certain specifications must be met. The equipment must be preserved and stored in such a way that it does not constitute any danger to health, environment or personal injury.

1. The equipment must be stored in its original transportation box.
2. Ensure that the units are clearly separated in the shelves and that each unit is easily identifiable.
3. The box must not be used for any purpose for which it was not intended (work platform, steps, table etc.).
4. Boxes must not be placed on top of each other, unless specific markings permit this.
5. Boxes must not be placed directly on a dirt floor.
6. Do not open a box for inspection unless special circumstances permit so.

   “Special circumstances” may be suspected damage to the box and its content, or inspections by civil authorities.

   a. If a unit is damaged, prepare an inspection report stating the condition of the unit and the actions taken. Describe the damage and collect photographic evidence if possible. Re-preserve the equipment.
   b. If the unit is not damaged, check the humidity absorbing material. If required, dry or replace the bags, then re-pack the unit according to the packing instructions.
7. If a box has been opened, make sure that is it closed and sealed after the inspection. Use the original packing material as far as possible.
8. The storage room/area must be dry with a non-condensing atmosphere. It must be free from corrosive agents.
9. The storage room/area’s mean temperature must not be lower than -10° C, and not warmer than +50° C. If other limitations apply, the crates will be marked accordingly.
10. Boxes must not be exposed to moisture from fluid leakages.
11. Boxes must not be exposed to direct sunlight or excessive warmth from heaters.
12. Boxes must not be subjected to excessive shock and vibration.
13. If the unit contained in a box holds normal batteries, these may have been disconnected/isolated before the unit was packed. These must only be reconnected before the installation starts. Units containing batteries are marked.

Caution

Units containing lithium or alkaline batteries must be handled separately and with care. Such units are marked accordingly. Do not attempt to recharge such batteries, open them, or dispose of them by incineration.

Refer to the applicable product data sheets or battery handling procedures for further details.

Temperature protection

Any units that requires protection against extreme temperatures are identified as such in the applicable documentation. The box used to transport and store such units are clearly marked, for example:

Must not be transported or stored in temperatures below -5 °C.

Other temperature limits may be used if applicable.

If a unit needs temperature protection, the box to be used for storage and transportation must be lined on all walls, base and lid, using minimum 5 cm thick polyurethane or polystyrene foam.

Most system units can normally be stored in temperatures between -30° C and +70° C. Refer to the relevant technical specifications for details.

Note

Unless otherwise specified, transducers and hydrophones must not be stored in temperatures below −10°C and above +50°C.

Unpacking instructions

Prior to installation or use, electronic, electromechanical and mechanical units must be unpacked from their transport boxes. It is important that this unpacking is done according to the relevant instructions, and without inflicting damage to the equipment.

Topics

Unpacking standard parts and units

Prior to installation or use, parts and units must be inspected, and then unpacked from their transport boxes. It is important that this unpacking is done without inflicting damage to the equipment.

Context

This procedure provides the basic tasks of unpacking units (main unit, spare parts etc) from boxes shipped from Kongsberg Maritime.

Note

If the unit in question is not unpacked for immediate use, you may consider storing it unopened in its original box. However, it may be useful to open the box to check its contents for damage and retrieve any accompanying documentation.

Do not use a knife to open cardboard boxes - the contents may be located close to the surface, and can then be damaged by the blade.

Procedure

1. Check the carton before opening it to ensure it shows no signs of dropping, immersion in water or other mishandling.
   1. If external damage is detected, open the box to check its contents.
   2. Request that a representative of the carrier to be present while the box is opened, so any transportation damage can be identified and documented.
   3. If a unit has been damaged, prepare an inspection report stating the condition of the unit and actions taken.

      Describe the damage, and collect photographic evidence if possible. Return the inspection report to Kongsberg Maritime as soon as possible.
2. Place the box on a stable work bench or on the floor with the top of the box facing upwards.
3. In the absence of other instructions, always open the top of the carton first.

   The contents of the box will normally have been lowered into the carton from above, so this will usually be the easiest route to follow. Be careful when you open the box, and make sure that the contents are not damaged. Do not use a knife to open cardboard boxes.
4. If the box has been closed using staples, remove the staples from the carton as you open it.

   This will reduce the possibilities of scratch injury to yourself and damage to the contents.
5. If a wooden box has been closed using screws, always remove them using a screwdriver.

   Do not attempt to force the lid open with a crowbar or similar tool.

6 Once the carton is open, carefully remove all loose packing and insulation material.

7 Check for user manuals and other documents that may have been added to the carton during packing.

8 Check also for special tools, door keys etc.

Unpacking mechanical units

Prior to installation or use, mechanical units must be unpacked from their transport boxes. It is important that this unpacking is done without inflicting damage to the equipment.

Prerequisites

Observe the procedure for unpacking of standard parts and units.

Context

Mechanical and electromechanical units may be heavy.

Procedure

1 Obtain the necessary lifting equipment, and make sure that the equipment is certified for the weight.

2 Lift the unit out of the transportation box.

3 Place it in a stable position on the floor/work bench.

4 Inspect the unit for visual damage.

5 Remove any packing material that may be inside the unit.

6 Collect and keep the relevant user manuals and/or documents provided with the unit.

Unpacking electronic and electromechanical units

Prior to installation or use, electronic and electromechanical units must be unpacked from their transport boxes. It is important that unpacking is done without inflicting damage to the equipment.

Context

Electronic and electromechanical units are normally wrapped in clear antistatic plastic bags.

Do not break the seal to open a printed circuit board, an electronic module or a unit before it shall be used. If the unit is returned with a broken seal we will assume that it has been used. You will then be billed accordingly.

Note

Beware of Electrostatic Discharge (ESD)!

When you handle electronic circuit boards and modules, you must beware of the dangers of electrostatic discharge (ESD), both to yourself and to the equipment. In order to ensure safe transport and storage, circuit boards and other electronic units will always be wrapped in a clear plastic protective bag, and the bag will be sealed.

Procedure

1. Lift the unit, in its protective bag, out of the transport box.

   Note

   You must never use the cables to lift or carry a unit.

2. Place it in a stable position on the floor or on the workbench.
3. Inspect the unit for damage.
   a. If a unit has been damaged, prepare an inspection report stating the condition of the unit and actions taken.
   b. Describe the damage, and collect photographic evidence if possible. Return the inspection report to Kongsberg Maritime as soon as possible.
4. Assuming all is well, open the bag and remove the unit.
5. Take out and keep the documentation.

   You will need the documentation if the item shall be returned to us.
6. If applicable, open the unit and check inside.
7. Remove any packing and desiccant material that may be found inside the shipping container or bag.
8. Collect and keep the relevant user manuals and/or installation documents provided with the unit.

Unpacking transducers

Prior to installation or use, transducers, sonar heads and hydrophones must be unpacked from their transport boxes. It is important that this unpacking is done without inflicting damage to the equipment.

Prerequisites

Observe the procedure for unpacking of standard parts and units.

Context

Transducers may be supplied mounted to a hull unit (if any), or packed separately. Sonar heads and hydrophones are normally packed and shipped in separate boxes. Boxes are identified by the order number and the serial number of the unit inside.

Note

Once a transducer, sonar head or hydrophone is unpacked, make sure that the body and the cabling are not exposed to any mechanical stress. Protect the transducer face with a padded cover plate to prevent damage.

Transducers may be heavy.

A transducer must always be handled as a delicate instrument. Incorrect actions may damage the transducer beyond repair.

Observe these transducer handling rules:

- **Do not** activate the transducer when it is out of the water.
- **Do not** lift the transducer by the cable.
- **Do not** step on the transducer cable.
- **Do not** handle the transducer roughly and avoid impacts.
- **Do not** expose the transducer to direct sunlight or excessive heat.
- **Do not** use high-pressure water, sandblasting, metal tools or strong solvents to clean the transducer face.

Procedure

1. Obtain the necessary lifting equipment, and make sure that the equipment is certified for the weight.
2. Lift the transducer, sonar head or hydrophone out of the transportation box.
3. Place it in a stable position on the floor/work bench.
4. Inspect the unit for visual damage.
5. Make sure that the relevant protection is kept in place until the final stages of the installation.
6. Collect and keep the relevant user manuals and/or documents provided with the unit.
7. Observe the handling rules for transducers.

Specifications for storage after unpacking

The unit must whenever possible be stored in its original transportation crate until ready for installation.

General specifications

During storage, each box must not be used for any purpose for which it was not intended (work platform, table, steps etc.).

Once unpacked, all equipment must be kept in a dry, non condensing atmosphere, free from corrosive agents and isolated from sources of vibration.

Note

Do not break the seal to open a circuit board package before the board is to be used. If the board package is returned to Kongsberg Maritime with the seal broken, we will assumed that the unit has been used, and then you will be billed accordingly.

Each unit must be installed in its intended operating position as soon as possible after unpacking. If the unit contains normal batteries, these may have been disconnected/isolated before the unit was packed. These must then be reconnected during the installation procedure. Units containing batteries are marked.

Caution

Units containing lithium or alkaline batteries must be handled separately and with care. Such units are marked accordingly. Do not attempt to recharge such batteries, open them, or dispose of them by incineration.

Refer to the applicable product data sheets or battery handling procedures for further details.

Temperature protection

Any units that requires protection against extreme temperatures are identified as such in the applicable documentation. The box used to transport and store such units are clearly marked, for example:

Must not be transported or stored in temperatures below -5 °C.

Other temperature limits may be used if applicable.

If a unit needs temperature protection, the box to be used for storage and transportation must be lined on all walls, base and lid, using minimum 5 cm thick polyurethane or polystyrene foam.

Most system units can normally be stored in temperatures between -30° C and +70° C. Refer to the relevant technical specifications for details.

Note

Unless otherwise specified, transducers and hydrophones must not be stored in temperatures below −10°C and above +50°C.

Index

D

E

F

G

H

I

K

L

M

N

O

P

R

S

T

U

V

W